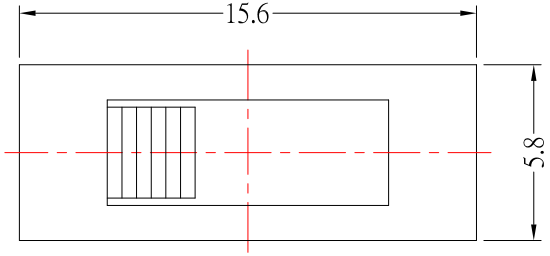

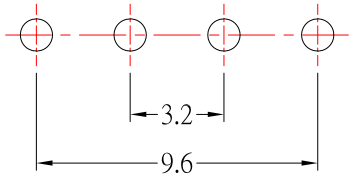

P.C.B LAYOUT
BOTTOM VIEW

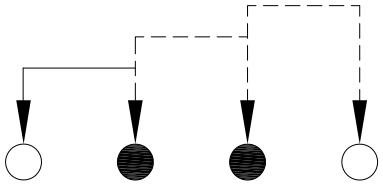

SCHEMATIC (NON-SHORTING)

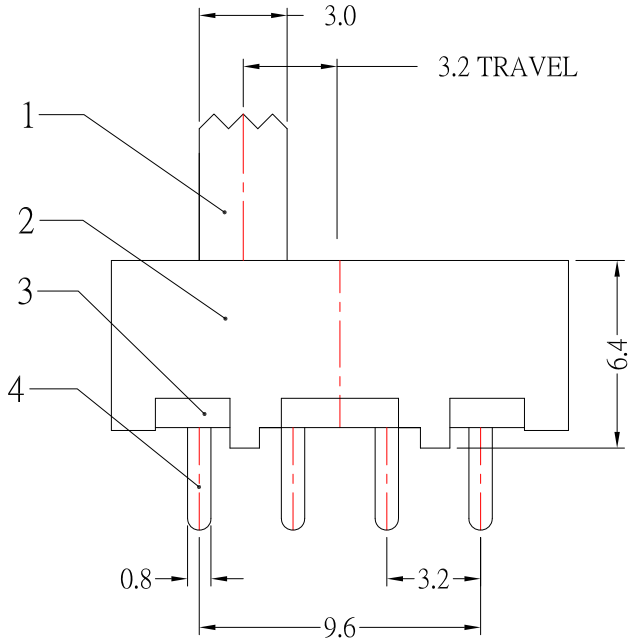

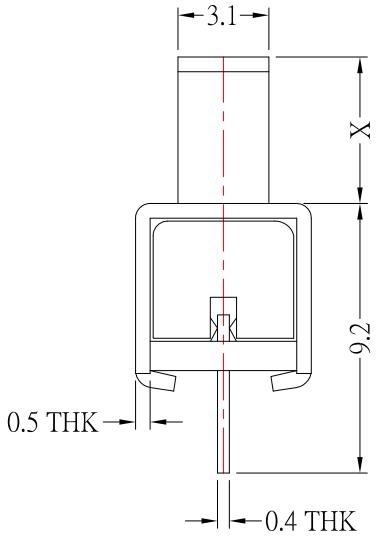

Model No.	X(mm)
SS-13F06-G2	2mm
SS-13F06-G3	3mm
SS-13F06-G4	4mm
SS-13F06-G5	5mm
SS-13F06-G6	6mm
SS-13F06-G7	7mm
SS-13F06-G8	8mm
SS-13F06-G9	9mm

SPECIFICATIONS

Rating	DC 50V 0.5A
Circuit	1P - 3T
Contact Resistance	200mΩ Max.
Insulation Resistance	100MΩ Min.
Operating Force	250gf ±100gf
Operating Life (cycles)	10,000

NO.	DESCRIPTION	QTY	MATERIAL	REMARK
7	STEEL BALL	1	STAINLESS	Natural
6	SPRING	1	STAINLESS	Natural
5	CONTACT CLIP	1	PHOSPHOR BRONZE	Ag-plated
4	TERMINAL	4	BRASS	Ag-plated
3	BASE	1	PHENOLIC RESIN	Natural
2	FRAME	1	SPCC	Ni-Plated
1	KNOB	1	POM	Black

ITEM NO.	DESCRIPTION	DRAWN	DATE
3	新增SPEC	Jack	112014
2	更新材質	Jack	040214
1	更新尺寸6.0改5.8	Jack	031714

CONTACT 建倚科技股份有限公司
CONTACT TECHNOLOGY CORP.

TOLERANCE UNLESS OTHERWISE STATED : Up to 5 ±0.2; Above 5 ~ 15 ±0.3; Above 15 ~ 30 ±0.4; Above 30 ~ 50 ±0.5; Angle ±0.3°

3RD. ANGEL'S | UNITS MM

DRAWN BY: Jack Lu	DATE 11/20/14	MAT'L	
CHECKED BY: Jacky Chen	DATE 11/20/14	FINISH	
APPROVED BY: Tony Kao	DATE 11/20/14	SCALE 1 : 1	SHEET NO. 1 of 1

TITLE	SWITCH		
MODLE	SLIDE SWITCH		
DWG NO.	SS-13F06-Gx-S191	SIZE	A4
PART NO.	SS-13F06-Gx-S191	VER	R3