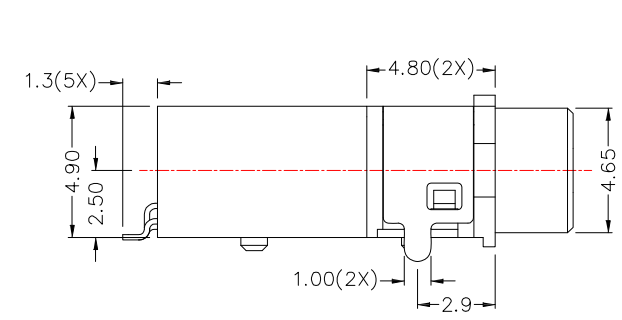

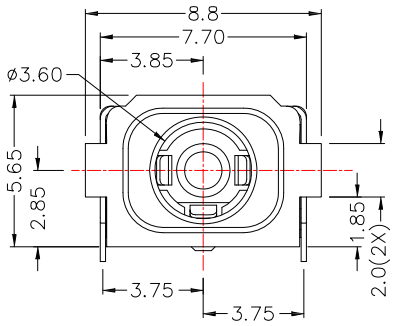

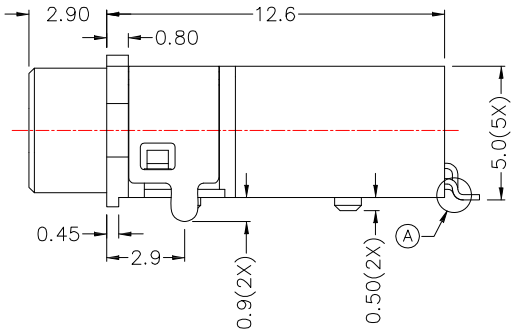

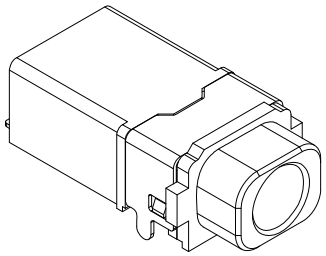

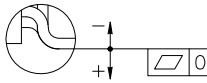

A DETAIL COPLANARITY

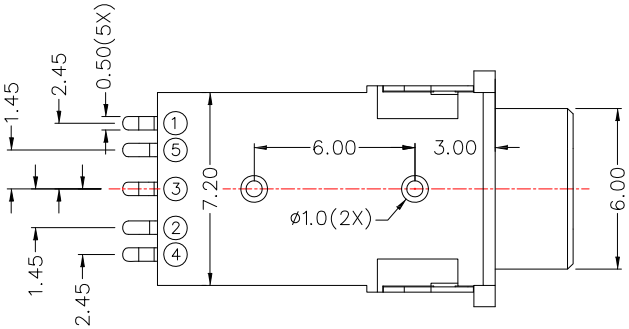

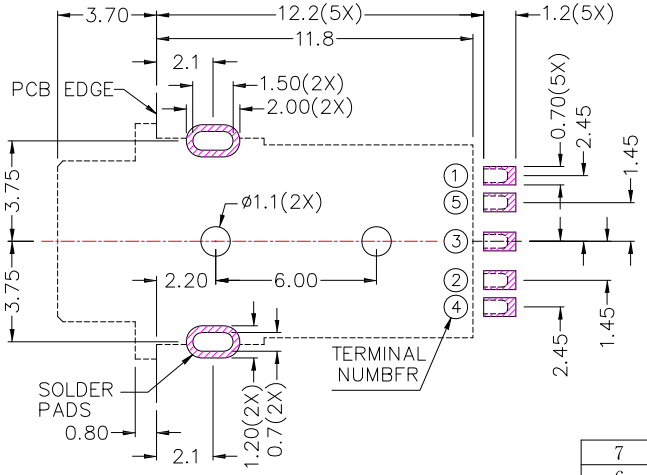

RECOMMENDED SOLDER PAD LAYOUT (TOP VIFW)

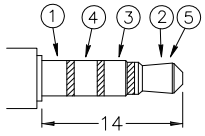

ø3.5 MATE PLUG

MODEL NO.	PJ-WP30015DS
SCHEMATIC	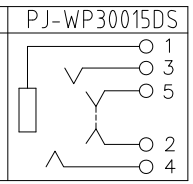

SPECIFICATION

1. Rating ：DC 12V 1.0A
2. Contact resistance：≤50mΩ
3. Insulation resistance：≥100MΩ
4. Withstand voltage：500VAC
5. Insertion and extraction force：3-30N
6. life test：5,000 cycles
7. Waterproof Lever: IPX7

NO.	DESCRIPTION	QTY	MATERIAL	PLATING
7	HOUSING	1	PA10T	
6	SHIELD	1	BRASS	Ni-Plating
5	5# CONTACT FOOT	1	PHOSPHOR BRONZE	Au-Plating
4	4# CONTACT FOOT	1	PHOSPHOR BRONZE	Au-Plating
3	3# CONTACT FOOT	1	PHOSPHOR BRONZE	Au-Plating
2	2# CONTACT FOOT	1	PHOSPHOR BRONZE	Au-Plating
1	1# CONTACT FOOT	1	PHOSPHOR BRONZE	Au-Plating

ITEM NO.	DESCRIPTION	DRAWN	DATE
4	更新材質表	Jack	082421
3	更新材質表	Jack	122520
2	更新材質	Jack	030717
1	新增SPEC	Jack	010816

建倚科技股份有限公司
CONTACT TECHNOLOGY CORP.

TOLERANCE UNLESS OTHERWISE STATED：
Up to 5 ±0.2
Above 5 ~ 15 ±0.3
Above 15 ~ 30 ±0.4
Above 30 ~ 50 ±0.5
Angle ±0.3°

3RD. ANGEL'S | UNITS | MM

DRAWN BY: Jack Lu	DATE 08/24/21	MAT'L	
CHECKED BY: Jacky Chen	DATE 08/24/21	FINISH	
APPROVED BY: Tony Kao	DATE 08/24/21	SCALE 1 : 1	SHEET NO. 1 of 1

TITLE	JACK		
MODLE	3.5mm PHONE JACK 防水型		
DWG NO.	PJ-WP30015DS	SIZE	A4
PART NO.	PJ-WP30015DS	VER	R4