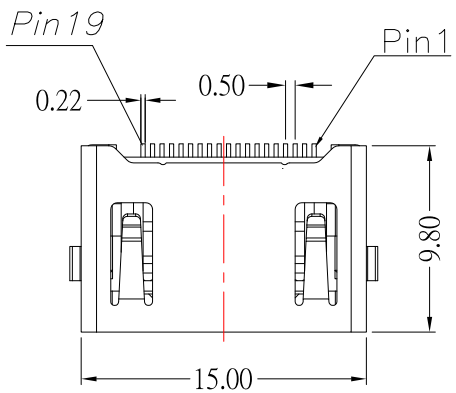

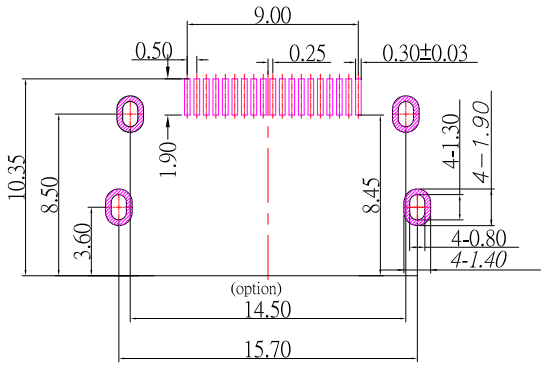

RECOMMENDED PCB LAYOUT (TOP VIEW)

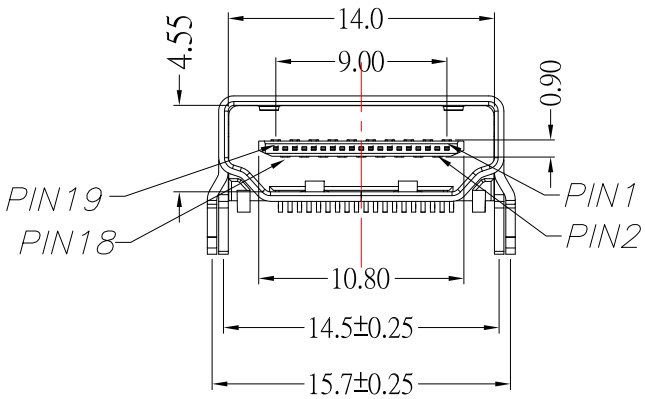

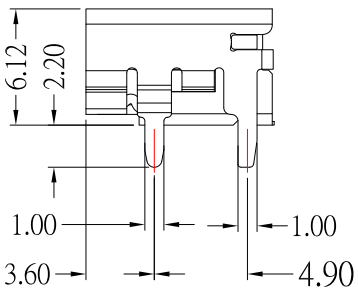

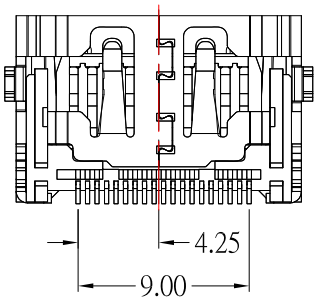

RoHS Compliant

NOTE:

1.MATERIAL:

1.1 HOUSING: LCP,Black

1.2 CONTACT: BRASS

1.3 SHELL: BRASS

2.PLATING :

2.1 CONTACT: PLATED GOLD IN MATING AREA ;
TIN PLATED ON SOLDER BALLS ;
NICKEL UNDER PLATED OVERALL

2.2 SHELL: NICKEL UNDER PLATED SURFACE LAYER

3.ELECTRICAL:

3.1 RATING CURRENT: 0.5A

3.2 RATING VOLTAGE: 40V DC

3.3 CONTACT RESISTANCE: 30 mΩ Max

3.4 INSULATION RESISTANCE: 1000MΩ Min

3.5 WITHSTANDING VOLTAGE: 500V DC / minute

3.6 OPERATING TEMPERATURE: -25˚C ~85˚C

ITEM NO.	DESCRIPTION	DRAWN	DATE
3	新增OPERATING TEMPERATURE	Jack	070522
2	更新圖面	Jack	031920
1	更新料號	Jack	021115

CONTACT 建倚科技股份有限公司 CONTACT TECHNOLOGY CORP.

TOLERANCE UNLESS OTHERWISE STATED : Up to 5 ±0.2; Above 5 ~ 15 ±0.3; Above 15 ~ 30 ±0.4; Above 30 ~ 50 ±0.5; Angle ±0.3˚

3RD. ANGEL'S

UNITS MM

DRAWN BY: Jack Lu	DATE 07/05/22	MAT'L	
CHECKED BY: Jacky Chen	DATE 07/05/22	FINISH	
APPROVED BY: Tony Kao	DATE 07/05/22	SCALE 1 : 1	SHEET NO. 1 of 1

TITLE	CONNECTOR		
MODLE	HDMI A/F 短體無耳無柱 SMT		
DWG NO.	HDMI-19P-SND5-S277	SIZE	A4
PART NO.	HDMI-19P-SND5-S277	VER	R3