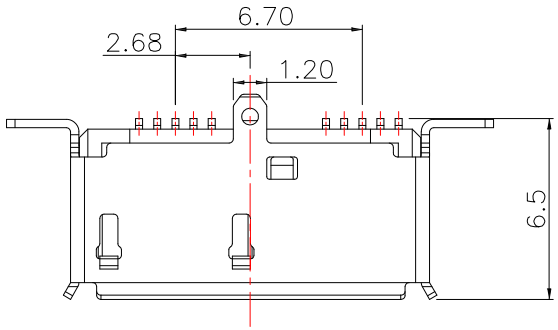

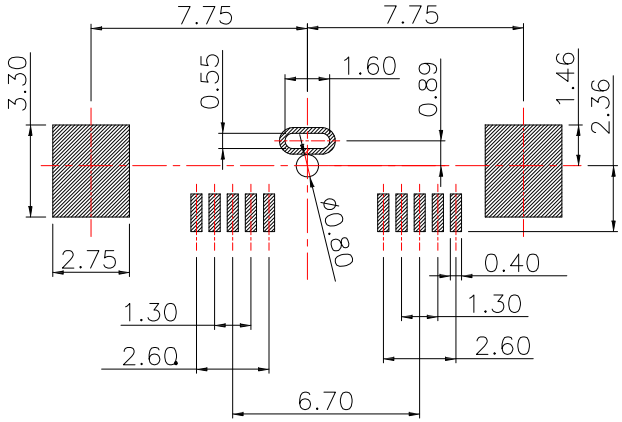

P.C.B LAYOUT MOUNTING PATTERN

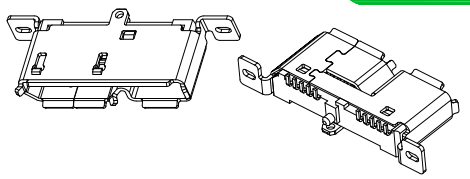

MRUSB-10B30xVSE-S242

鍍層厚度 :

Blank : 1u"
2 : 15u"
3 : 30u"

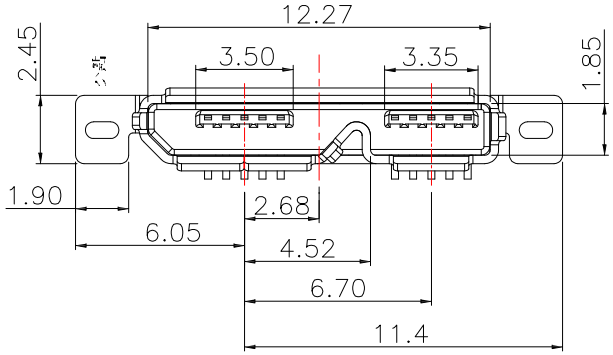

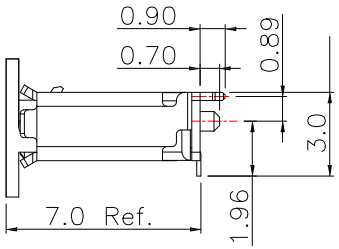

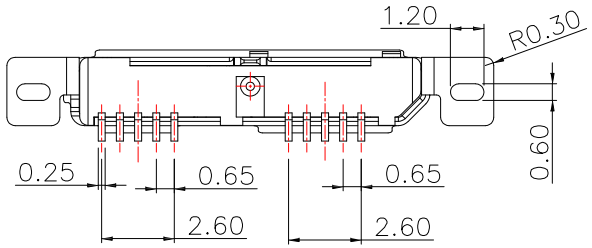

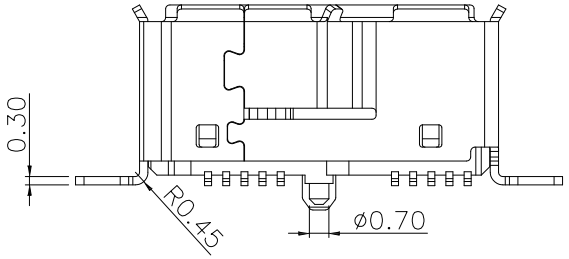

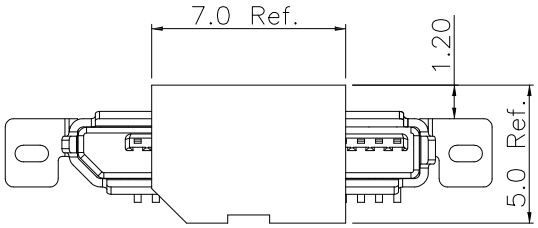

NO	TITLF	O'TY	MATFRIAL	RFMARK
4	CAP	1	LCP	UL94V-0; COLOR:BLACK
3	SHELL	1	SUS304	Nickel under Plated surface layer
2	CONTACT	10	BRASS	Plated Gold in Mating Area ; Tin Plated on Solder Balls ; Nickel under plated overall
1	HOUSING	1	LCP	UL94V-0; COLOR:BLACK

ITEM NO.	DESCRIPTION	DRAWN	DATE

CONTACT 建倚科技股份有限公司
CONTACT TECHNOLOGY CORP.

TOLERANCE UNLESS OTHERWISE STATED :
Up to 5 ±0.2
Above 5 ~ 15 ±0.3
Above 15 ~ 30 ±0.4
Above 30 ~ 50 ±0.5
Angle ±0.3°

3RD. ANGEL'S | UNITS MM

DRAWN BY: Jack Lu	DATE 03/03/14	MAT'L	
CHECKED BY: Jacky Chen	DATE 03/03/14	FINISH	
APPROVED BY: Tony Kao	DATE 03/03/14	SCALE	1 : 1
		SHEET NO.	1 of 1

TITLE	CONNECTOR
MODLE	MICRO 3.0 B TYPE 直立式 有柱
DWG NO.	MRUSB-10B30xVSE-S242
PART NO.	MRUSB-10B30xVSE-S242

SIZE A4 | VER R