MRUSB-5B-D4x-S347

SHELL鍍層:

TN
NI

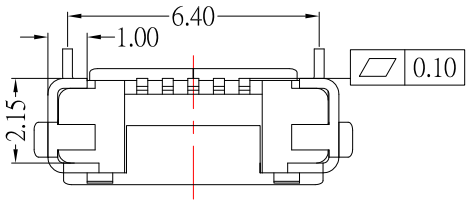

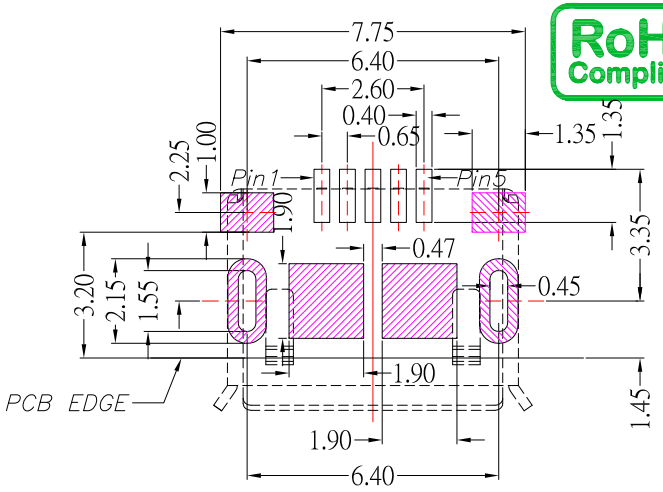

P.C.B LAYOUT MOUNTING PATTERN

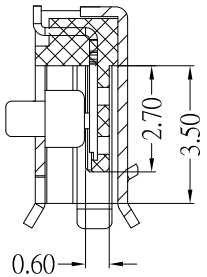

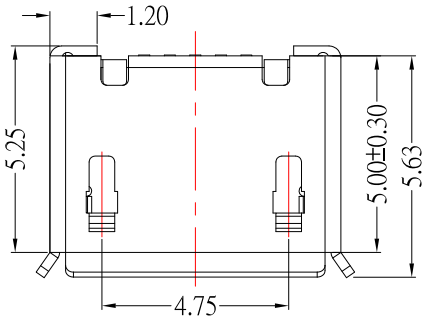

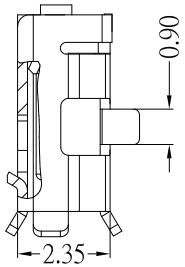

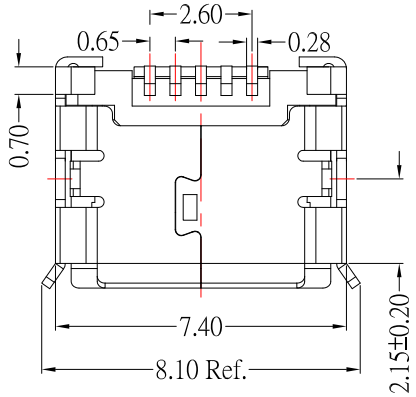

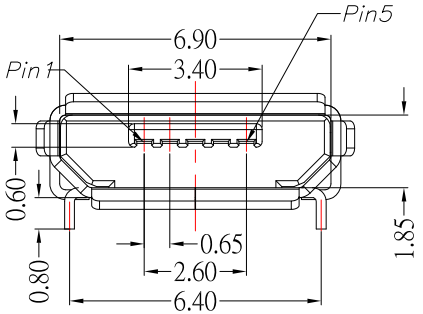

NOTES:

MATERIAL:

1.1 HOUSING: LCP

1.2 CONTACT: PHOSPHOR BRONZE

1.3 SHELL: BRASS

Finish:

2.1 Contact: Plated Gold in Mating Area ;
Gold Plated on Solder Balls
Nickel under plated overall

3.SPECIFICATION:

3.1 CURRENT RATING: PIN(1,5)1.8A MAX ; PIN(2,3,4)1.0 A MAX

3.2 DIELECTRIC WITHSSTANDING VOLTAGE: 100 V(ac) FOR 1min

3.3 CONTACT RESISTANCE: 30 mΩ MAX.

3.4 INSULATION RESISTANCE: 100 MΩ MIN.

3.5 TOTAL MATING FORCE: 3.57 Kgf MAX.

3.6 TOTAL UNMATING FORCE: 1.0 Kgf MIN.

3.7 TEMPERATURE RANGE: -30°C ~ +80°C

ITEM NO.	DESCRIPTION	DRAWN	DATE
2	更新圖面	Jack	102120
1	更新圖面	Jack	120717

CONTACT 建倚科技股份有限公司
CONTACT TECHNOLOGY CORP.

TOLERANCE UNLESS OTHERWISE STATED : Up to 5 ±0.2; Above 5 ~ 15 ±0.3; Above 15 ~ 30 ±0.4; Above 30 ~ 50 ±0.5; Angle ±0.3°

3RD. ANGEL'S | UNITS MM

DRAWN BY: Jack Lu	DATE 10/21/20	MAT'L	
CHECKED BY: Jacky Chen	DATE 10/21/20	FINISH	
APPROVED BY: Tony Kao	DATE 10/21/20	SCALE 1 : 1	SHEET NO. 1 of 1

TITLE	CONNECTOR		
MODLE	MICRO USB 5BF 前插(6.4)後貼無柱		
DWG NO.	MRUSB-5B-D4x-S347	SIZE	A4
PART NO.	MRUSB-5B-D4x-S347	VER	R2