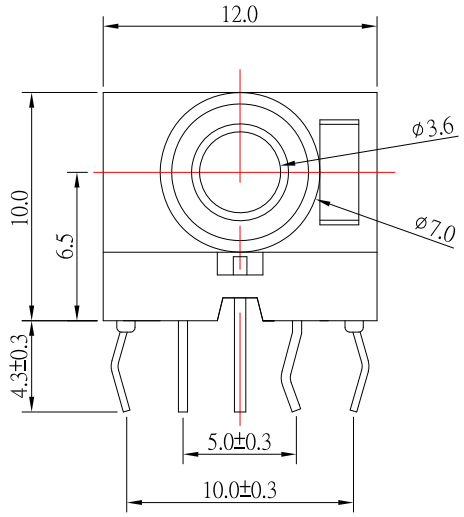


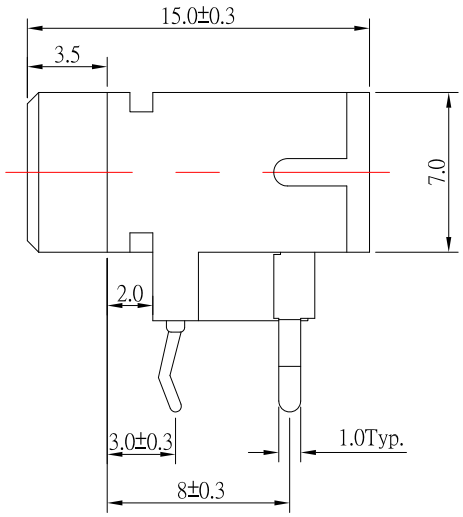


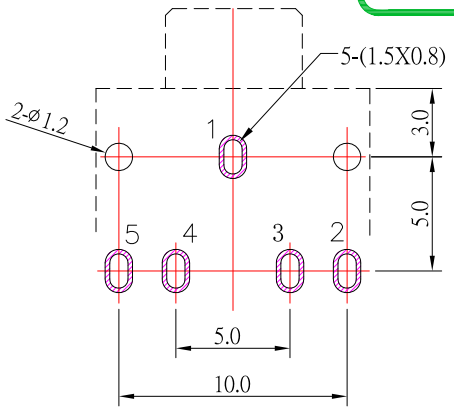


P.C.B LAYOUT
(TOP VIEW)

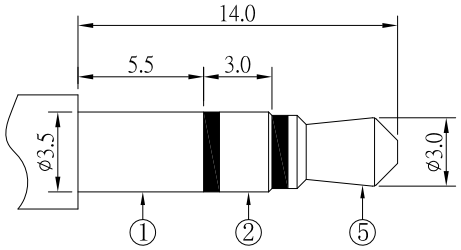


ø3.50mm 3 POLE PLUG

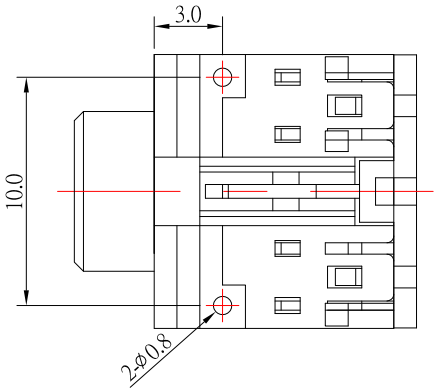


SCHEMATIC

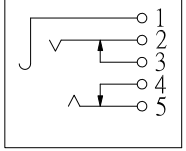


SPECIFICATION

1.Rating ：DC 30V, 1.0A；
2.Contact resistance：≤30mΩ；
3.Insulation resistance：≥100MΩ；
4.Withstand voltage：500VAC ；
5.Insertion and extraction force：3-30N
6.life test：5,000 cycles。

| NO. | DESCRIPTION | QTY | MATERIAL | PLATING |
|---|---|---|---|---|
| 7 | COVER | 1 | PBT | |
| 6 | HOUSING | 1 | PBT | |
| 5 | 5# CONTACT FOOT | 1 | PHOSPHOR BRONZE | Sn-Plating |
| 4 | 4# CONTACT FOOT | 1 | BRASS | Sn-Plating |
| 3 | 3# CONTACT FOOT | 1 | BRASS | Sn-Plating |
| 2 | 2# CONTACT FOOT | 1 | PHOSPHOR BRONZE | Sn-Plating |
| 1 | 1# CONTACT FOOT | 1 | BRASS | Sn-Plating |

| ITEM NO. | DESCRIPTION | DRAWN | DATE |
|---|---|---|---|
| 7 | 更新圖面 | Jack | 022324 |
| 6 | 更新樣式及尺寸 | Jack | 112922 |
| 5 | 更新樣式及尺寸 | Jack | 072121 |
| 4 | 更新樣式及尺寸公差 | Jack | 070821 |
| 3 | 更新樣式 | Jack | 090518 |
| 2 | 更新為A0版 | Jack | 011017 |
| 1 | 更新SPEC | Jack | 122916 |

CONTACT 建倚科技股份有限公司
CONTACT TECHNOLOGY CORP.

TOLERANCE UNLESS OTHERWISE STATED : Up to 5 ±0.2; Above 5 ~ 15 ±0.3; Above 15 ~ 30 ±0.4; Above 30 ~ 50 ±0.5; Angle ±0.3°

3RD. ANGEL'S | UNITS | MM

| | | | |
|---|---|---|---|
| DRAWN BY: Jack Lu | DATE 02/22/24 | MAT'L | |
| CHECKED BY: Jacky Chen | DATE 02/22/24 | FINISH | |
| APPROVED BY: Tony Kao | DATE 02/22/24 | SCALE 1 : 1 | SHEET NO. 1 of 1 |

| | | | |
|---|---|---|---|
| TITLE | JACK | | |
| MODLE | PHONE JACK | | |
| DWG NO. | PJ-3565-S124 | SIZE | A4 |
| PART NO. | PJ-3565-S124 | VER | R7 |