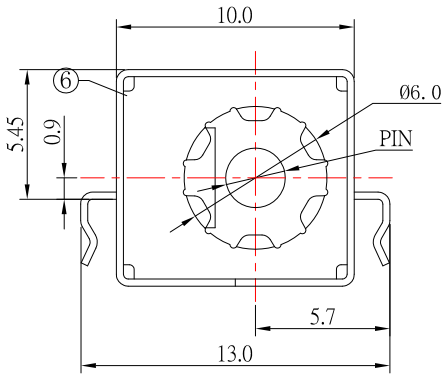

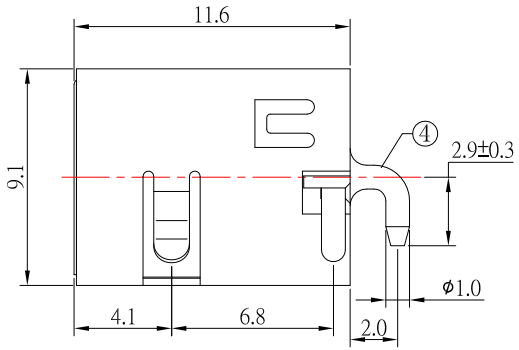

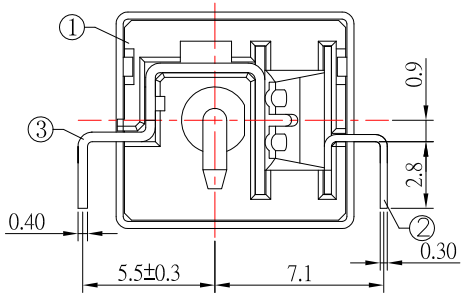

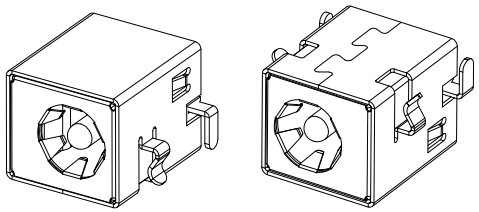

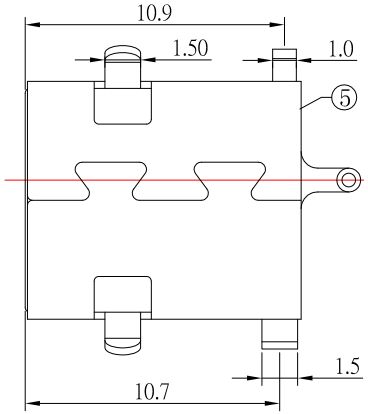

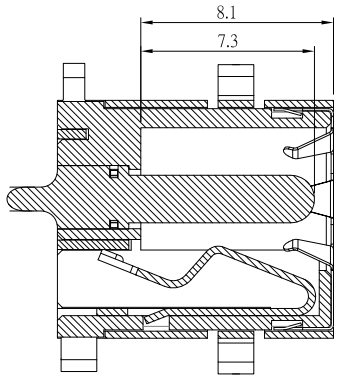

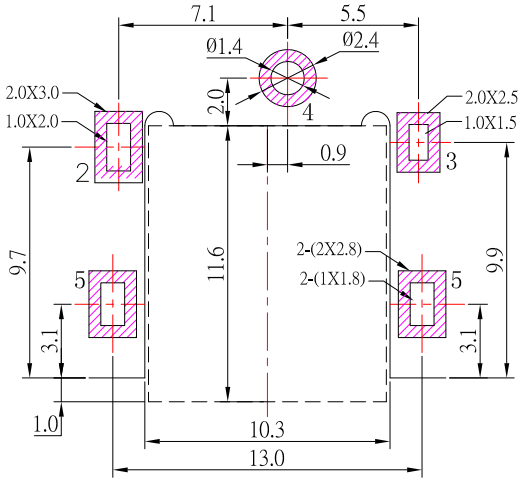

PCB LAYOUT MOUNTING PATTERN

SPECIFICATION

1.Rating ：DC 20V, 5.5A
2.Contact resistance：≤30mΩ
3.Insulation resistance：≥100MΩ
4.Withstand voltage：500VAC
5.Insertion and extraction force：3-30N
6.life test：5,000 cycles

MODEL NO.	DC-D3200-X
SCHEMATIC	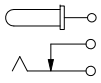
CENTER PIN	Ø2.00mm
	Ø2.50mm

NO.	DESCRIPTION	QTY	MATERIAL	COLOR	REMARK
6	SPRING PIECE	1	SUS301	———	———
5	COAT	1	IRON	———	Ni-Plating
4	PIN	1	ZINC ALLOY	———	Ni-Plating
3	CONTACT FOOT	1	BRASS	———	Ag-Plating
2	SPRING PIECE	1	PHOSPHOR BRONZE	———	Ag-Plating
1	HOUSING	1	PA9T	———	———

ITEM NO.	DESCRIPTION	DRAWN	DATE
4	更新CENTER PIN選項	Jack	042418
3	新增尺寸	Jack	070717
2	更新爲A0版	Jack	112416
1	新增尺寸	Jack	111716

建倚科技股份有限公司
CONTACT TECHNOLOGY CORP.

TOLERANCE UNLESS OTHERWISE STATED : Up to 5 ±0.2; Above 5 ~ 15 ±0.3; Above 15 ~ 30 ±0.4; Above 30 ~ 50 ±0.5; Angle ±0.3°

3RD. ANGEL'S

UNITS MM

DRAWN BY: Jack Lu	DATE 04/24/18	MAT'L	
CHECKED BY: Jacky Chen	DATE 04/24/18	FINISH	
APPROVED BY: Tony Kao	DATE 04/24/18	SCALE 1 : 1	SHEET NO. 1 of 1

TITLE	JACK		
MODLE	DC JCAK		
DWG NO.	DC-D3200-x-S124	SIZE	A4
PART NO.	DC-D3200-x-S124	VER	A2