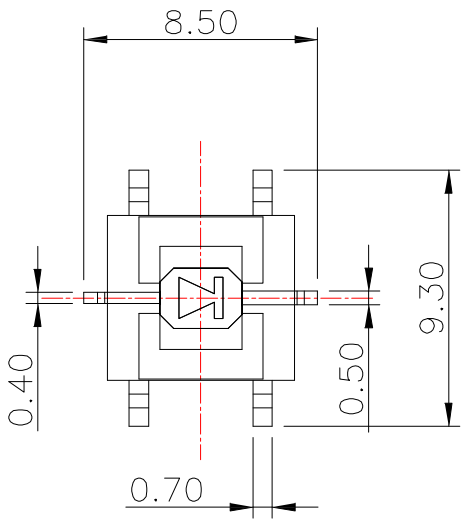

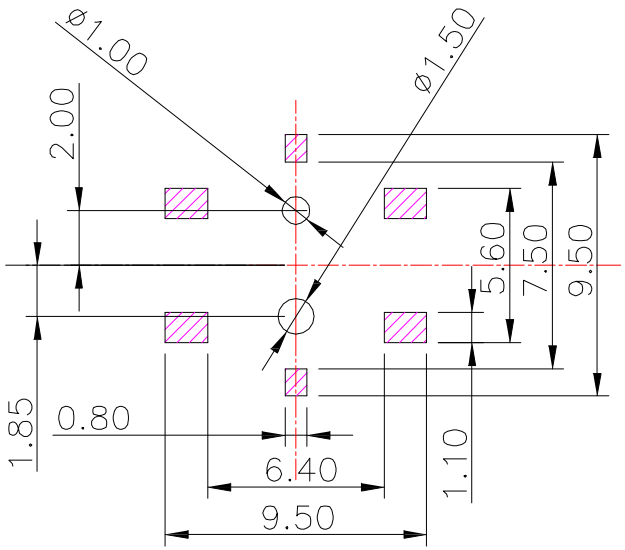

P.C.B LAYOUT

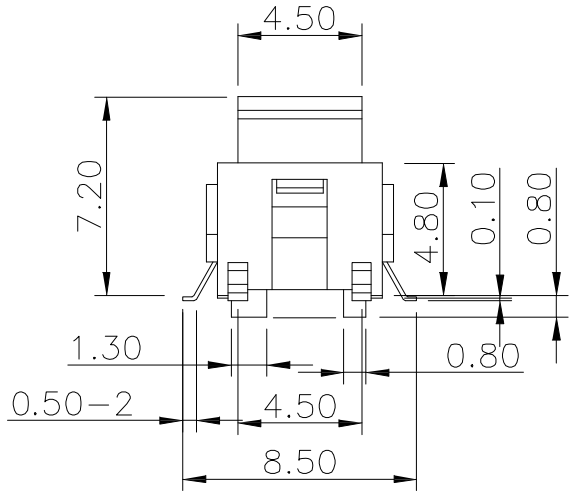

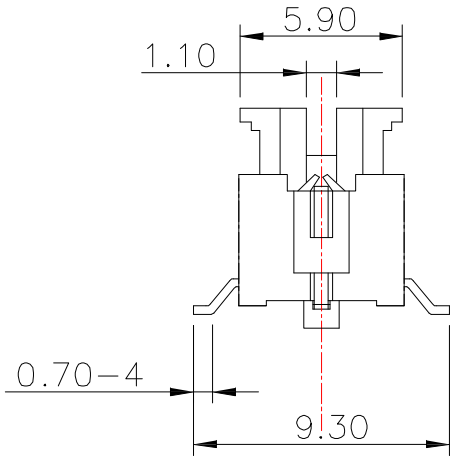

COLOR OF LED

0	Without	1	Red
2	Green	3	Orange
4	Yellow	7	Blue
8	White		

ITEM NO.	DESCRIPTION	DRAWN	DATE

CONTACT 建倚科技股份有限公司 CONTACT TECHNOLOGY CORP.

TOLERANCE UNLESS OTHERWISE STATED: Up to 5 ±0.2; Above 5 ~ 15 ±0.3; Above 15 ~ 30 ±0.4; Above 30 ~ 50 ±0.5; Angle ±0.3°

3RD. ANGEL'S | UNITS MM

DRAWN BY: Jack Lu	DATE 04/24/15	MAT'L		TITLE	SWITCH		
CHECKED BY: Jacky Chen	DATE 04/24/15	FINISH		MODLE	TACT SWITCH W/I LED SMT TYPE		
APPROVED BY: Tony Kao	DATE 04/24/15	SCALE	1 : 1	DWG NO.	TS-M-x-C0-E0-S010	SIZE	A4
		SHEET NO.	1 of 1	PART NO.	TS-M-x-C0-E0-S010	VER	R