DIMENSIONS

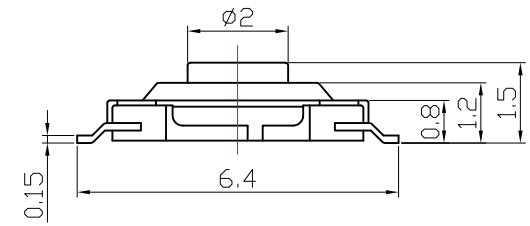

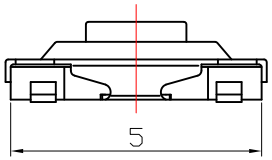

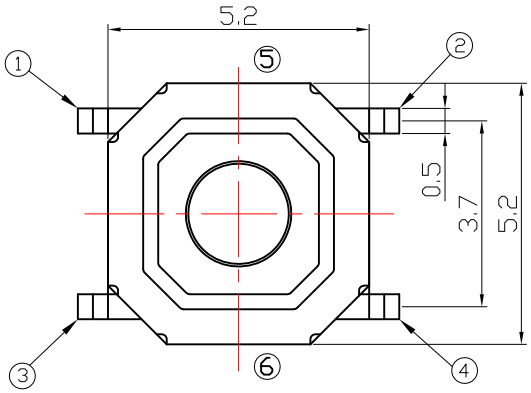

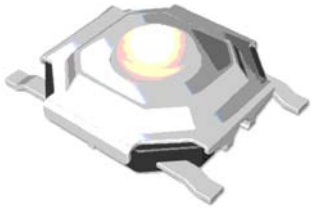

P.C.B MOUNTING HOLE DIMENSIONS

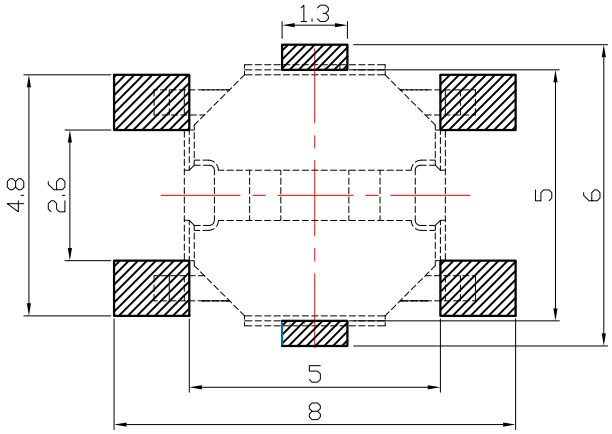

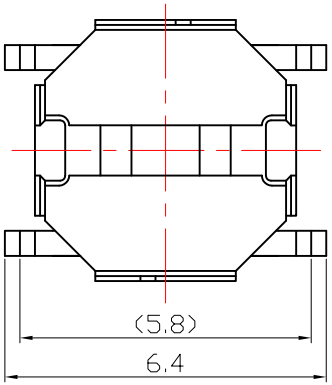

CIRCUIT DIAGRAM

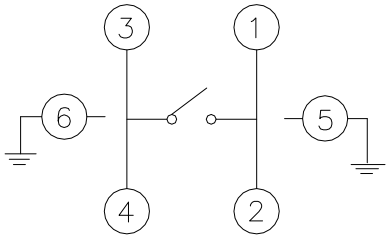

SPECIFICATIONS

Rating	DC 12V 50mA Max.							
Circuit	1P - 1C							
Contact Resistance	100mΩ Max.							
Travel	0.25 ± 0.1mm							
Operating Force	0	100 ± 30 gf	1	130 ± 30 gf	2	160 ± 50 gf	3	250 ± 50 gf
Operating Life(cycles)	100,000 cycles							

ITEM NO.	DESCRIPTION	DRAWN	DATE
2	更新CIRCUIT DIAGRAM	Jack	090613
1	新增OF的選項	Jack	070213

CONTACT 建倚科技股份有限公司 CONTACT TECHNOLOGY CORP.

TOLERANCE UNLESS OTHERWISE STATED : Up to 5 ±0.2; Above 5 ~ 15 ±0.3; Above 15 ~ 30 ±0.4; Above 30 ~ 50 ±0.5; Angle ±0.3°

3RD. ANGEL'S | UNITS | MM

DRAWN BY: Jack Lu	DATE 09/06/13	MAT'L	
CHECKED BY: Jacky Chen	DATE 09/06/13	FINISH	
APPROVED BY: Tony Kao	DATE 09/06/13	SCALE 1 : 1	SHEET NO. 1 of 1

TITLE	SWITCH		
MODLE	TACT SWITCH		
DWG NO.	TS-A87G-x-S126	SIZE	A4
PART NO.	TS-A87G-x-S126	VER	A2