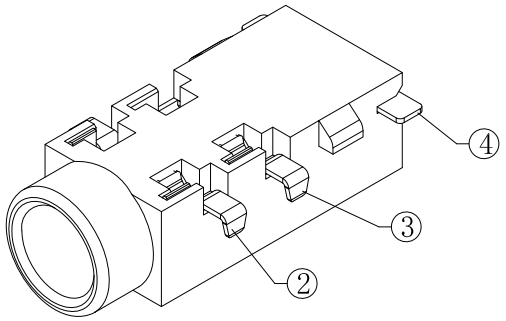

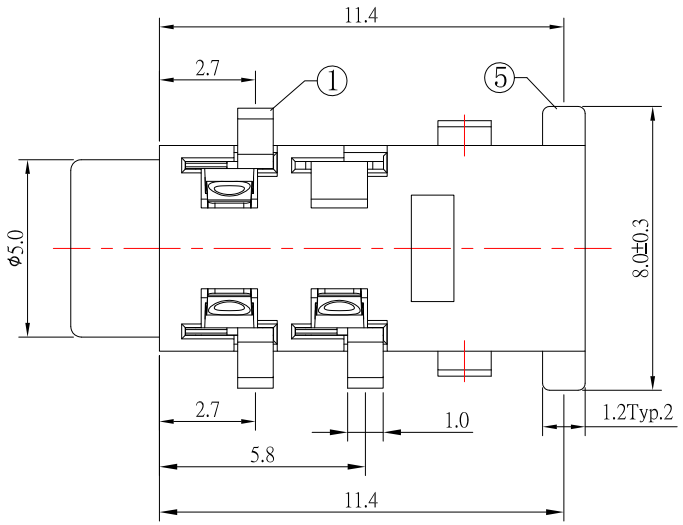

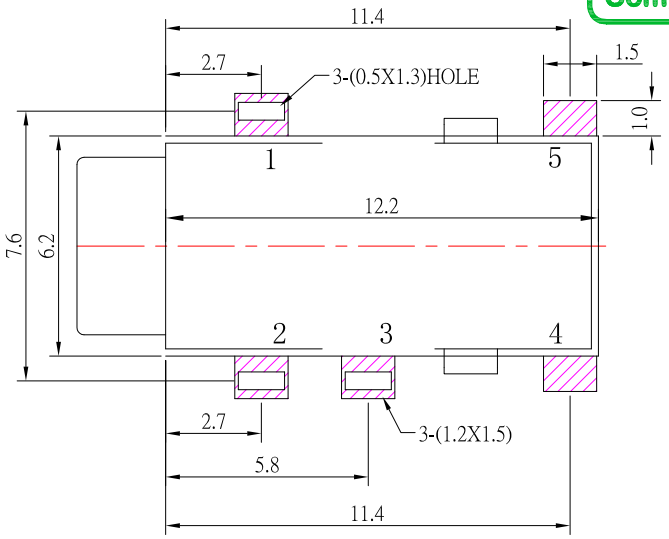

P.C.B LAYOUT
TOP VIEW

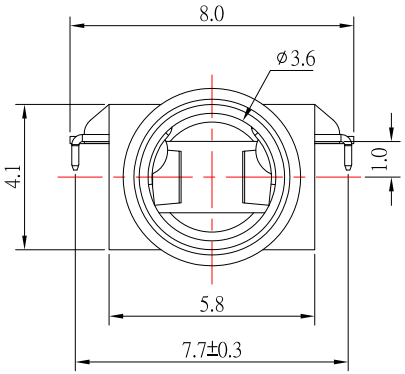

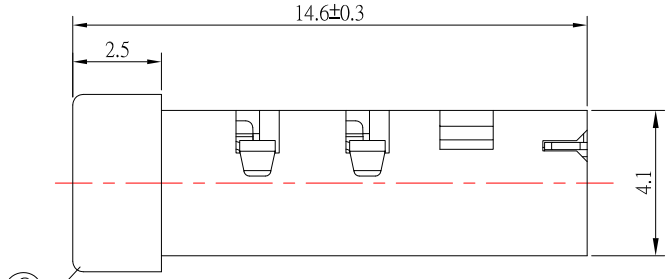

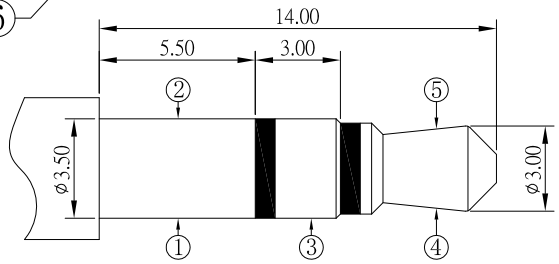

ø3.50mm 3 POLE PLUG

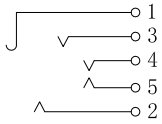

SCHEMATIC

SPECIFICATION

1.Rating ：DC 30V 0.5A；
2.Contact resistance：≤0.03Ω；
3.Insulation resistance：≥100MΩ (DC250V)；
4.Withstand voltage：500VAC ；
5.Insertion and extraction force：3-20N;
6.life test：5,000 cycles。

NO.	DESCRIPTION	Q'TY	MATERIAL	PLATING
6	HOUSING	1	PA9T	
5	5# CONTACT FOOT	1	PHOSPHOR BRONZE	Ag-Plating
4	4# CONTACT FOOT	1	PHOSPHOR BRONZE	Ag-Plating
3	3# CONTACT FOOT	1	PHOSPHOR BRONZE	Ag-Plating
2	2# CONTACT FOOT	1	PHOSPHOR BRONZE	Ag-Plating
1	1# CONTACT FOOT	1	PHOSPHOR BRONZE	Ag-Plating

ITEM NO.	DESCRIPTION	DRAWN	DATE
3	更新樣式	Jack	082119
2	更新尺寸	Jack	080519
1	新增PLUG	Jack	121318

CONTACT 建倚科技股份有限公司
CONTACT TECHNOLOGY CORP.

TOLERANCE UNLESS OTHERWISE STATED : Up to 5 ±0.2; Above 5 ~ 15 ±0.3; Above 15 ~ 30 ±0.4; Above 30 ~ 50 ±0.5; Angle ±0.3°

3RD. ANGEL'S | UNITS MM

DRAWN BY: Jack Lu	DATE 08/21/19	MAT'L		TITLE	JACK
CHECKED BY: Jacky Chen	DATE 08/21/19	FINISH		MODLE	PHONE JACK
APPROVED BY: Tony Kao	DATE 08/21/19	SCALE	1 : 1	DWG NO.	PJ-S3112A1-S124
		SHEET NO.	1 of 1	PART NO.	PJ-S3112A1-S124

SIZE A4 | VER R3