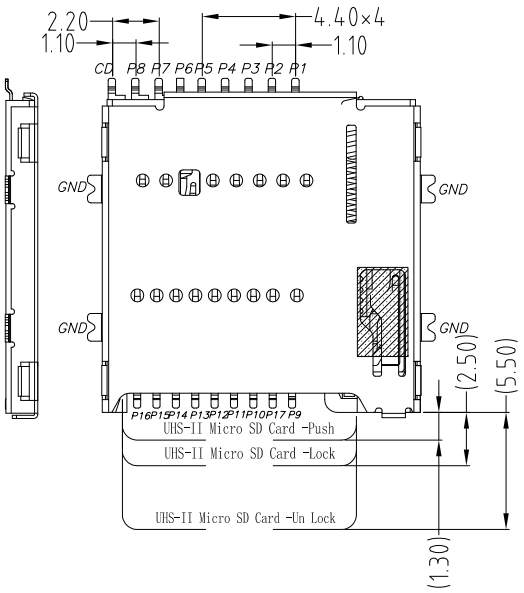

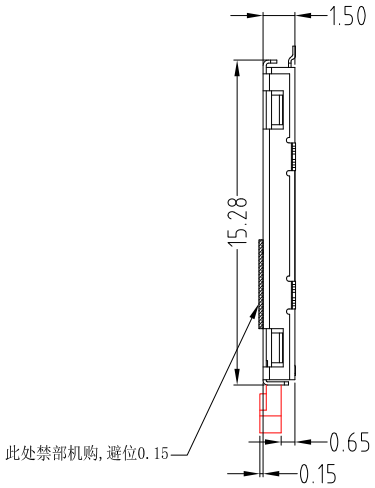

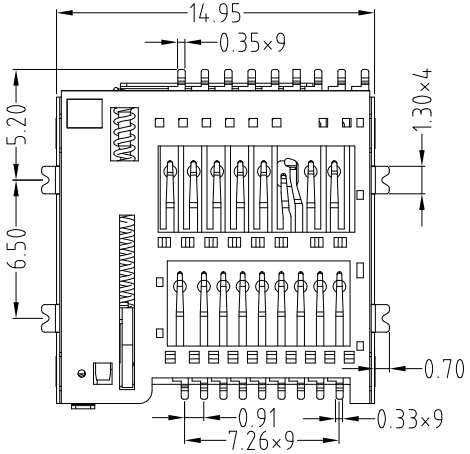

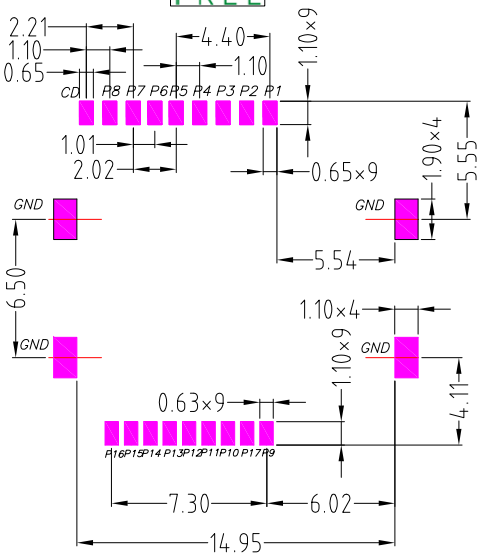

RECOMMEND PCB LAYOUT

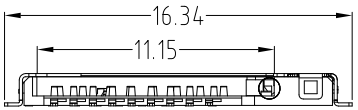

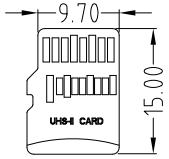

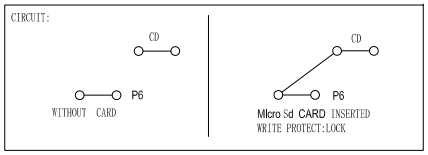

PIN NO.	Micro SD With UHS-II and SW10 support
P1	DAT2 (Data Line Bit 2)
P2	CD/DAT3 (card Detect/Data Line)
P3	CMD (Command/Response)
P4	VDD1 (Supply voltage 3.3V)
P5	CLOCK
P6	VSS (Supply voltage ground)
P7	DAT0/RCLK+ (Data Line/RCLK+)
P8	DAT1/RCLK- (Data Line/RCLK-)
P9	CD (偵測P)
	GND
	GND
	GND
	GND
P9	Vdd2(supply voltage ground1.8v)
P10	Vss(supply voltage ground)
P11	UHS-II D0+
P12	UHS-II D0-
P13	Vss(supply voltage ground)
P14	UHS-II D1-
P15	UHS-II D1+
P16	Vss(supply voltage ground)
P17	SW10 (Single wire protocl interface)

SPECIFICATION

Electrical :

1.Current Rating: 0.5A

2.Voltage Rating: 5.0V AC/DC

3.Contact Resistance: 100 mΩ Max.

4.Insulation Resistance: 1,000 MΩ Min.

Environmental:

1.Operating Temperature: -20°C ~ +60°C.

Material:

1.Housing: LCP

2.Contact: Phosphor Bronze

3.Shell: Stainless Steel

Finish:

1.Contact: Plated Gold in Mating Area ;
Gold Plated on Solder Balls ;
Nickel under plated overall

2.Shell: Nickel under Plated surface layer

ITEM NO.	DESCRIPTION	DRAWN	DATE

CONTACT 建倚科技股份有限公司 CONTACT TECHNOLOGY CORP.

TOLERANCE UNLESS OTHERWISE STATED : Up to 5 ±0.2; Above 5 ~ 15 ±0.3; Above 15 ~ 30 ±0.4; Above 30 ~ 50 ±0.5; Angle ±0.3°

3RD. ANGEL'S | UNITS MM

DRAWN BY: Jack Lu	DATE 03/31/22	MAT'L		TITLE	CONNECTOR
CHECKED BY: Jacky Chen	DATE 03/31/22	FINISH		MODLE	MICRO SD 4.0 H1.50 PUSH TYPE
APPROVED BY: Tony Kao	DATE 03/31/22	SCALE	1 : 1	DWG NO.	SD4-03918A-HF-S267 (SIZE A4)
		SHEET NO.	1 of 1	PART NO.	SD4-03918A-HF-S267 (VER R)