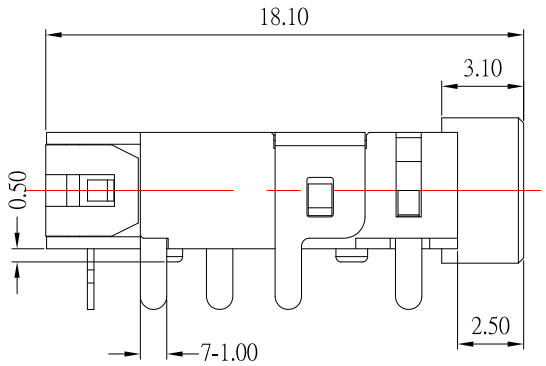

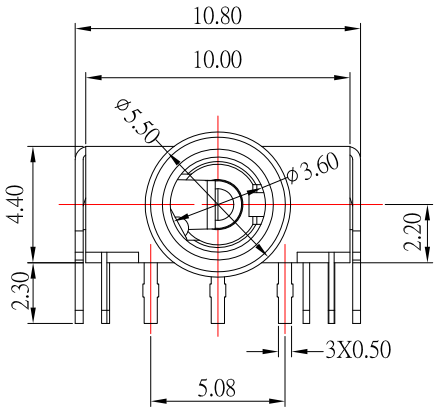

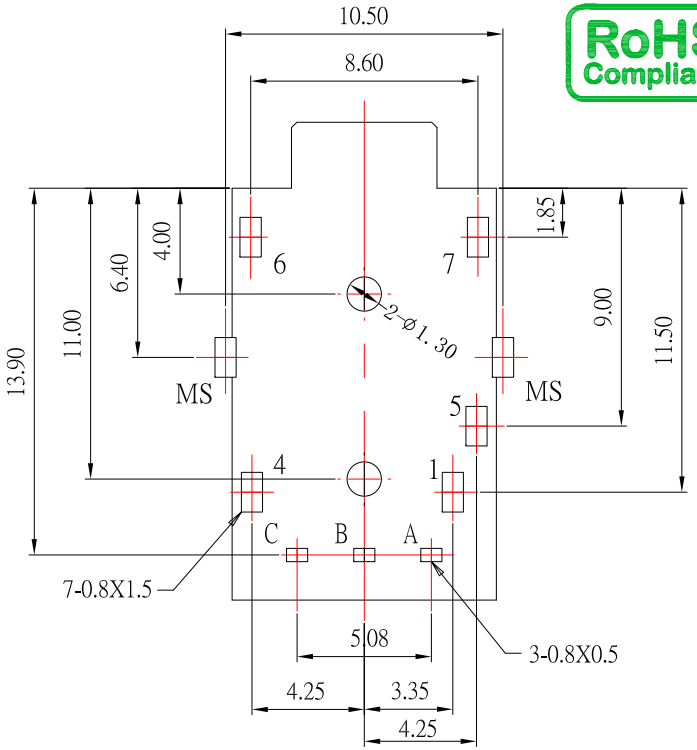

Recommended PCB Layout
<BOTTOM VIEW>

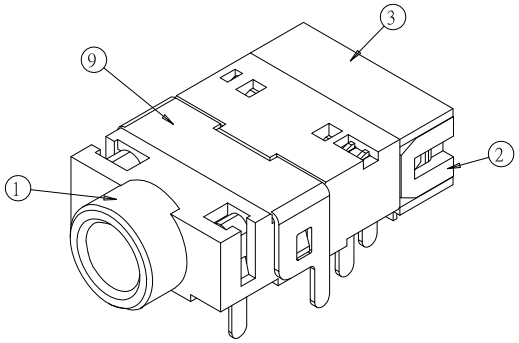

OJ-0015S-RXx-S214

1	16 Mbps
2	25 Mbps

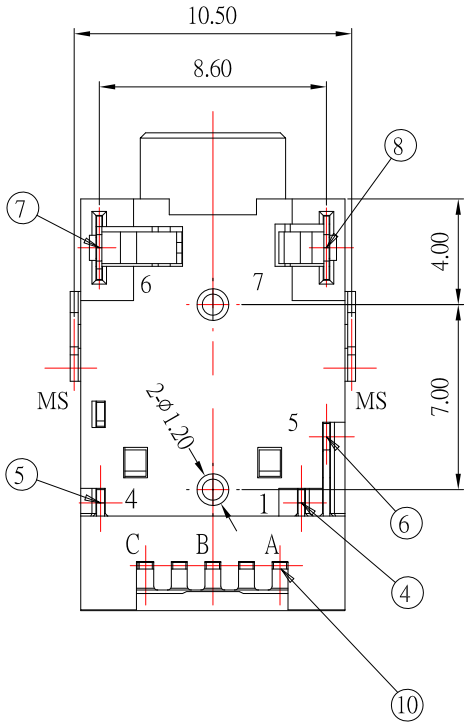

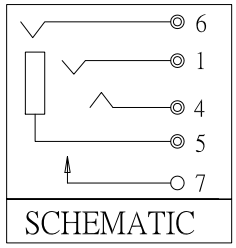

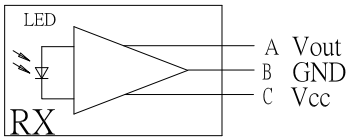

ITEM	DESCRIPTION	MATERIAL	FINISH	QTY'	NOTE
⑩	DRIVE IC RX			1	
⑨	SUPPORT	BRASS	Ni-Sn	1	TYCO LOGO
⑧	P CONTACT	PBS	Au	1	
⑦	D/A CONTACT	PBS	Au	1	
⑥	GND CONTACT	PBS	Au	1	
⑤	T CONTACT	PBS	Au	1	
④	R CONTACT	PBS	Au	1	
③	MINOR HOUSING	PA9T		1	PINK
②	COVER	PA9T		1	BLACK
①	HOUSING	PA9T		1	

ITEM NO.	DESCRIPTION	DRAWN	DATE
3	更新MINOR HOUSING材質顏色	Jack	060722
2	更新傳輸速率選項	Jack	112219
1	新增傳輸速率選項	Jack	103018

CONTACT 建倚科技股份有限公司
CONTACT TECHNOLOGY CORP.

TOLERANCE UNLESS OTHERWISE STATED : Up to 5 ±0.2; Above 5 ~ 15 ±0.3; Above 15 ~ 30 ±0.4; Above 30 ~ 50 ±0.5; Angle ±0.3°

3RD. ANGEL'S | UNITS MM

DRAWN BY: Jack Lu	DATE 06/07/22	MAT'L		TITLE	JACK
CHECKED BY: Jacky Chen	DATE 06/07/22	FINISH		MODLE	OPTICAL JACK (接收端)
APPROVED BY: Tony Kao	DATE 06/07/22	SCALE	1 : 1	DWG NO.	OJ-0015S-RXx-S214
		SHEET NO.	1 of 1	PART NO.	OJ-0015S-RXx-S214

SIZE A4 | VER R3