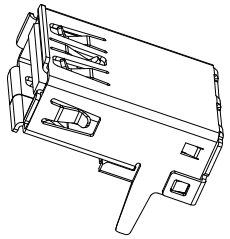

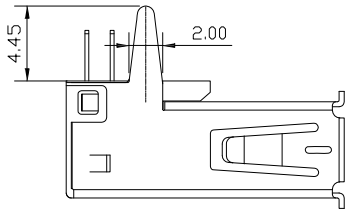

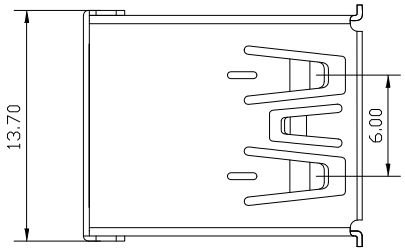

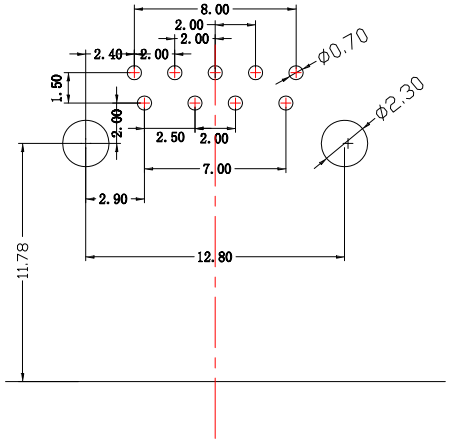

RECOMMENDED PCB LAYOUT

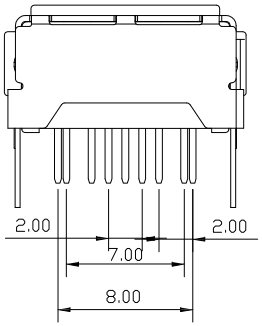

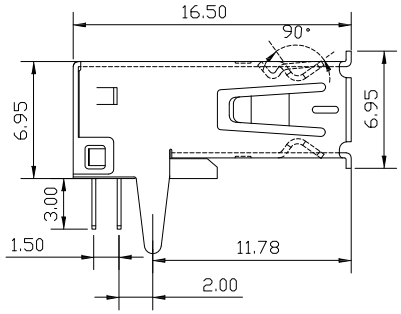

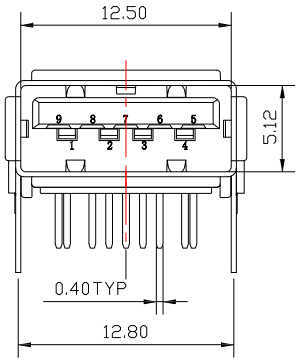

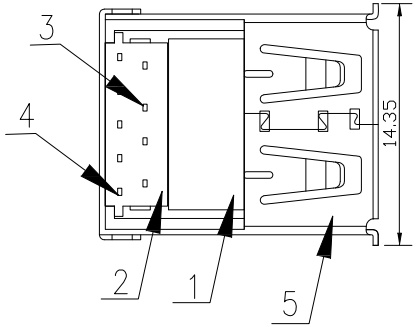

Pin Number	Signal Name
1	VBUS
2	D-
3	D+
4	GND
5	SSRX-
6	SSRX+
7	GND
8	SSTX-
9	SSRT+
Shell	Shield

RoHS Compliant

SUA-110H2-30x-S277

鍍層厚度 :

Blank : 1u"
2 : 15u"
3 : 30u"

NOTE:

1.MATERIAL:

1.1 Housing: PBT,(UL94V-0)

1.2 Contact: Phosphor Bronze

1.3 Shell: Brass

1.4 Cover: PBT

2.Finish:

2.1 Contact: Plated Gold in Mating Area ;
Tin Plated on Solder Balls ;
Nickel under plated overall

2.2 Shell: Nickel under Plated surface layer

3.SPECIFICATION:

3.1 Current Rate: 1.8 Amperes for pin 1& pin4
0.25 Amperes other contacts

3.2 insulator Resistance:100MΩ Min

3.3 Dielectric Strength: 100V AC

3.4 Contact Resistance: 30mΩ Max for pin 1& pin4
50mΩ Max for other contacts

3.5 Operation Temperature: -55°C ~ +85°C

3.6 Insertion Force: 35 N

3.7 Extraction Force: 10 N

ITEM NO.	DESCRIPTION	DRAWN	DATE

CONTACT 建倚科技股份有限公司
CONTACT TECHNOLOGY CORP.

TOLERANCE UNLESS OTHERWISE STATED : Up to 5 ±0.2; Above 5 ~ 15 ±0.3; Above 15 ~ 30 ±0.4; Above 30 ~ 50 ±0.5; Angle ±0.3°

3RD. ANGEL'S

UNITS MM

DRAWN BY: Jack Lu	DATE 06/13/14	MAT'L		TITLE	CONNECTOR		
CHECKED BY: Jacky Chen	DATE 06/13/14	FINISH		MODLE	USB 3.0 A/F 90 度 DIP 直腳		
APPROVED BY: Tony Kao	DATE 06/13/14	SCALE	1 : 1	DWG NO.	SUA-110H2-30x-S277	SIZE	A4
		SHEET NO.	1 of 1	PART NO.	SUA-110H2-30x-S277	VER	R