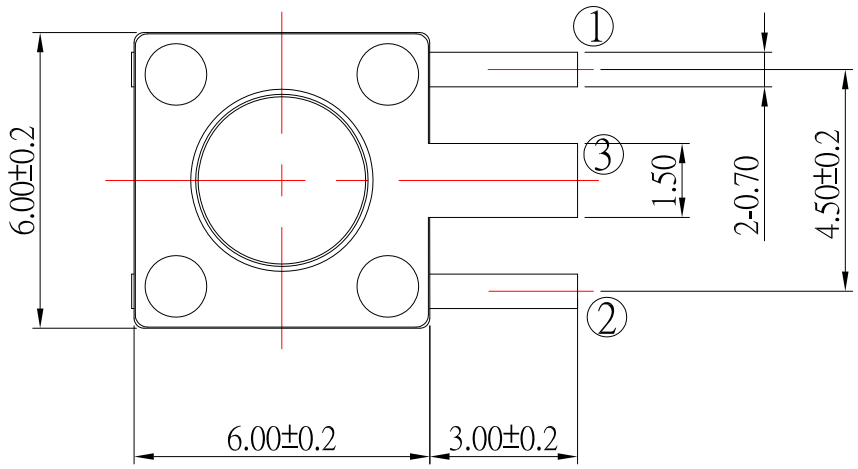

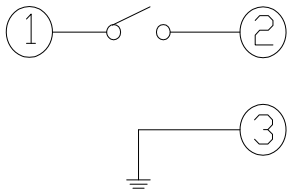

CIRCUIT DIAGRAM

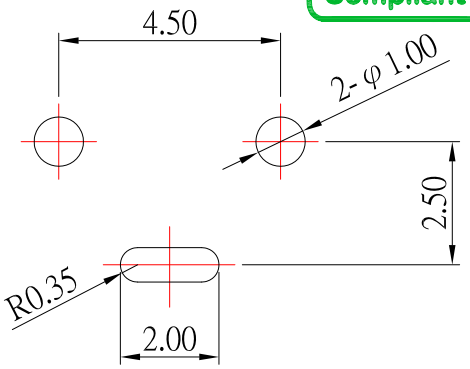

P.C.B LAYOUT MOUNTING PATTERN

HEIGHT

MODEL NO.	H(mm)
TS-A02NV1	4.3
TS-A02NV1A	5.0
TS-A02NV1AL	5.5
TS-A02NV1D	6.0
TS-A02NV1QL	6.5
TS-A02NV1E	7.0
TS-A02NV1R	7.5
TS-A02NV1C	8.0

SPECIFICATIONS

Rating	DC 12V 50mA Max.			
Contact Resistance	100mΩ Max.			
Operating Force	2	180±50gf	3	260±50gf
Life Cycles	80,000		50,000	

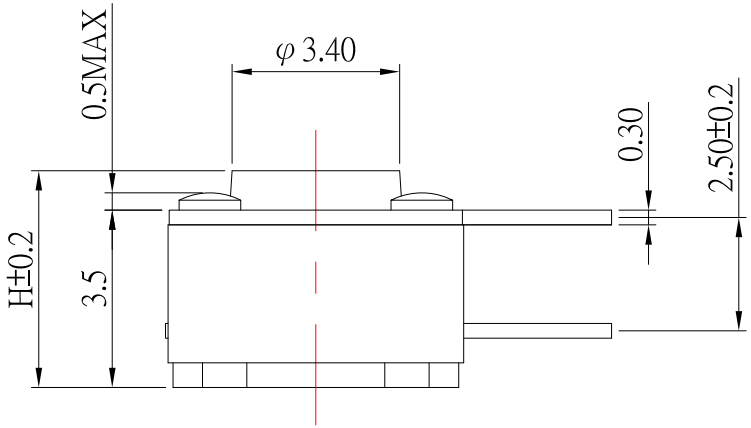

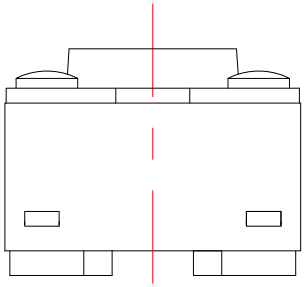

NO.	DESCRIPTION	QTY	MATERIAL	PLATING
E	TERMINAL	2	H65	Ag plated
D	CONTACT	1	PHOSPHOR BRONZE	Ag plated
C	COVER	1	SPCC	Tin plated over Ni
B	BASE	1	PA6T	
A	STEM	1	PA6T	

ITEM NO.	DESCRIPTION	DRAWN	DATE
2	更新尺寸和Life Cycles	Jack	051922
1	新增尺寸	Jack	060818

CONTACT 建倚科技股份有限公司
CONTACT TECHNOLOGY CORP.

TOLERANCE UNLESS OTHERWISE STATED : Up to 5 ±0.2; Above 5 ~ 15 ±0.3; Above 15 ~ 30 ±0.4; Above 30 ~ 50 ±0.5; Angle ±0.3°

3RD. ANGEL'S | UNITS MM

DRAWN BY: Jack Lu	DATE 05/19/22	MAT'L		TITLE	SWITCH		
CHECKED BY: Jacky Chen	DATE 05/19/22	FINISH		MODLE	TACT SW		
APPROVED BY: Tony Kao	DATE 05/19/22	SCALE	1 : 1	DWG NO.	TS-A02NV1x-x-S138	SIZE	A4
		SHEET NO.	1 of 1	PART NO.	TS-A02NV1x-x-S138	VER	R2