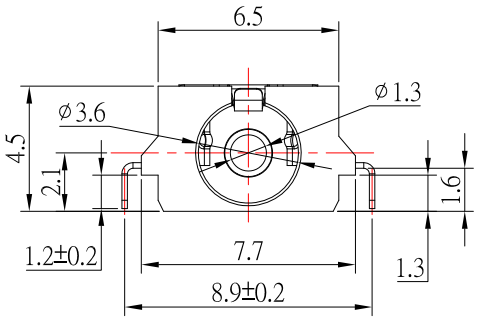

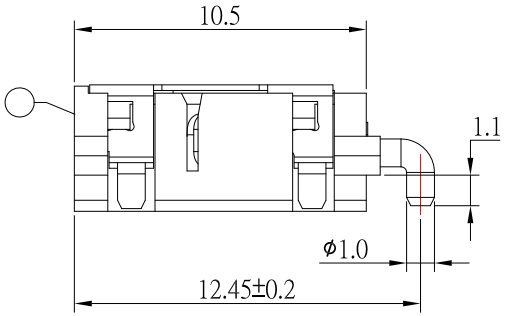

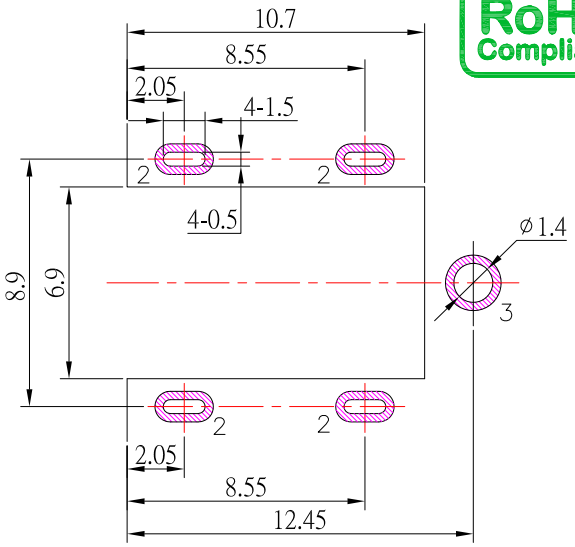

P.C.B LAYOUT
(TOP VIEW)

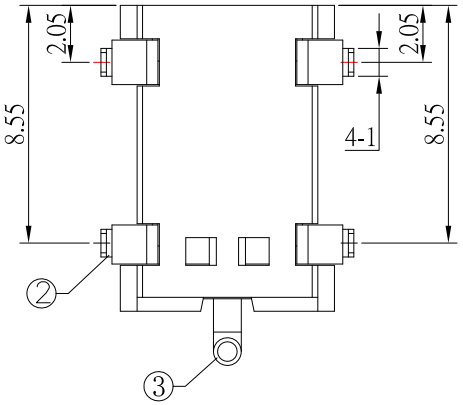

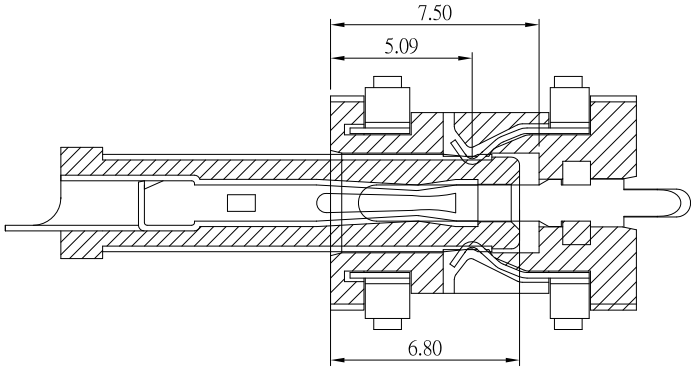

MODEL NO.	DC-S158-1.3
SCHEMATIC	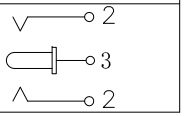

SPECIFICATION

1.Rating ：DC 30V, 3.0A；

2.Contact resistance：≤30mΩ；

3.Insulation resistance：≥100MΩ ；

4.Withstand voltage：500VAC ；

5.Insertion and extraction force：3-20N;

6.life test：5,000 cycles。

NO.	DESCRIPTION	QTY	MATERIAL	PLATING
3	PIN	1	BRASS	Au-Plating
2	SPRING PIECE	1	PHOSPHOR BRONZE	Au-Plating
1	HOUSING	1	PPA	

ITEM NO.	DESCRIPTION	DRAWN	DATE
3	更新圖面	Jack	010621
2	新增尺寸	Jack	040918
1	更新料號及更新為A0版	Jack	120716

CONTACT 建倚科技股份有限公司
CONTACT TECHNOLOGY CORP.

TOLERANCE UNLESS OTHERWISE STATED : Up to 5 ±0.2; Above 5 ~ 15 ±0.3; Above 15 ~ 30 ±0.4; Above 30 ~ 50 ±0.5; Angle ±0.3°

3RD. ANGEL'S

UNITS MM

DRAWN BY: Jack Lu	DATE 01/06/21	MAT'L	
CHECKED BY: Jacky Chen	DATE 01/06/21	FINISH	
APPROVED BY: Tony Kao	DATE 01/06/21	SCALE 1 : 1	SHEET NO. 1 of 1

TITLE	JACK		
MODLE	DC JACK		
DWG NO.	DC-S158-1.3-S124	SIZE	A4
PART NO.	DC-S158-1.3-S124	VER	R3