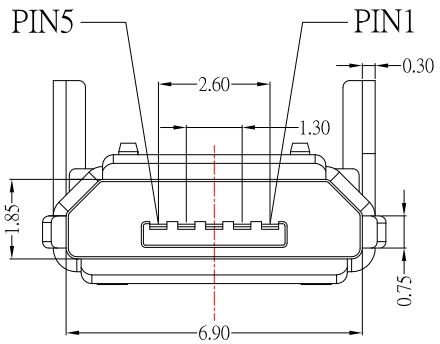

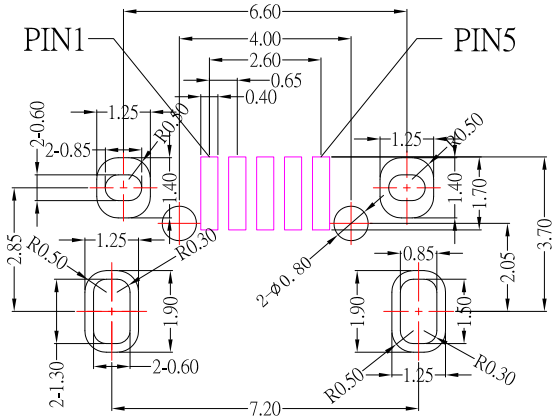

RECOMMENDED PCB LAYOUT

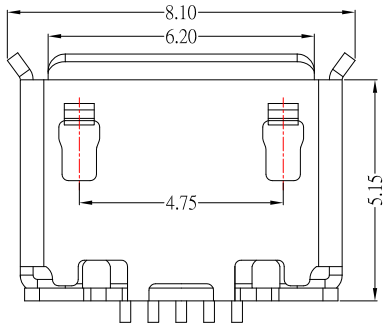

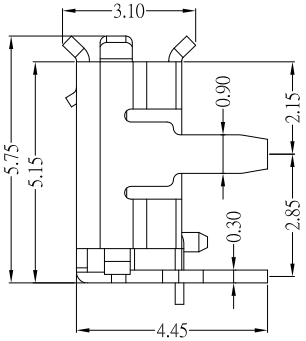

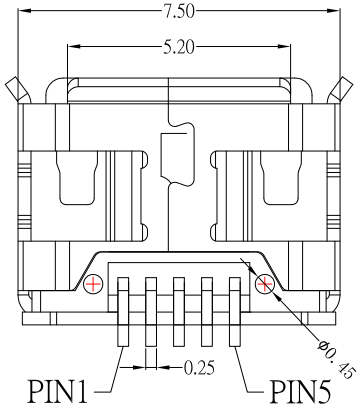

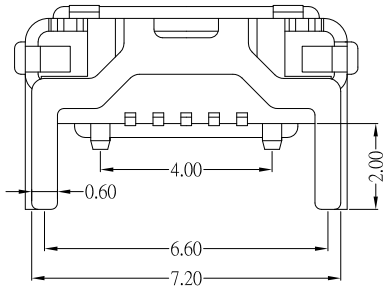

SPECIFICATIONS

Electrical:

1.Current Rating: 1.0A

2.Voltage Rating: 30V

3.Contact Resistance: 30 mΩ Max

4.Dielectric Withstanding Voltage: 100 V AC Min

5.Insulation Resistance: 100 MΩ Min

Mechanical:

1.Connector Mate and Unmate Force

1.1 Mate force: 35N (Max)

1.2 Unmate force: 10N(Min)

Material:

1.Housing: LCP

2.Contact: Brass

3.Shell: SUS

Finish:

1.Contact: Plated Gold in Mating Area ;

Gold Plated on Solder Balls

Nickel under plated overall

2.Shell: Nickel under Plated surface layer

ITEM NO.	DESCRIPTION	DRAWN	DATE
8	新增尺寸	Jack	071520
7	新增PIN模示	Jack	121917
6	更新為A0版	Jack	022316
5	更新PCB LAYOUT圖樣式	Jack	041715
4	更新圖面尺寸	Jack	111214
3	更新為A0版	Jack	102814
2	更新尺寸3.80改4.00	Jack	100214
1	更新尺寸4.00改3.80及2.88改2.80及更新pcb layout尺寸	Jack	100114
10	更新PCB LAYOUT尺寸	Jack	031523
9	更新底部樣式	Jack	112822

CONTACT 建倚科技股份有限公司 CONTACT TECHNOLOGY CORP.

TOLERANCE UNLESS OTHERWISE STATED: Up to 5 ±0.2; Above 5 ~ 15 ±0.3; Above 15 ~ 30 ±0.4; Above 30 ~ 50 ±0.5; Angle ±0.3°

3RD. ANGEL'S | UNITS | MM

DRAWN BY: Jack Lu	DATE 03/15/23	MAT'L	
CHECKED BY: Jacky Chen	DATE 03/15/23	FINISH	
APPROVED BY: Tony Kao	DATE 03/15/23	SCALE 1 : 1	SHEET NO. 1 of 1

TITLE	CONNECTOR		
MODLE	MICRO USB BF CONNECTOR		
DWG NO.	MRUSB-5B-EDA-S129	SIZE	A4
PART NO.	MRUSB-5B-EDA-S129	VER	R10