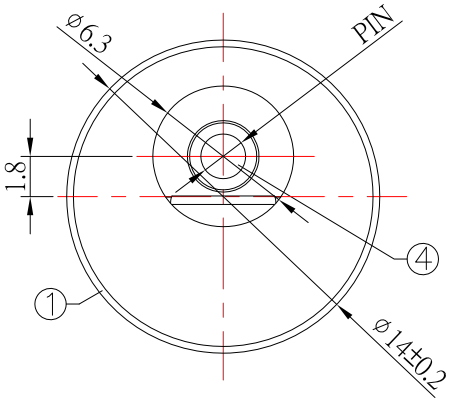

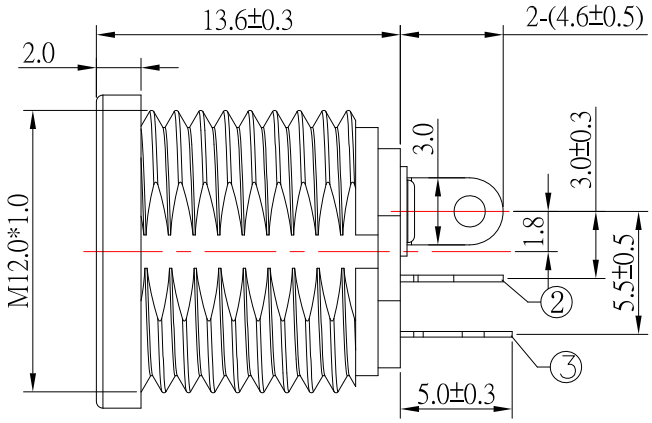

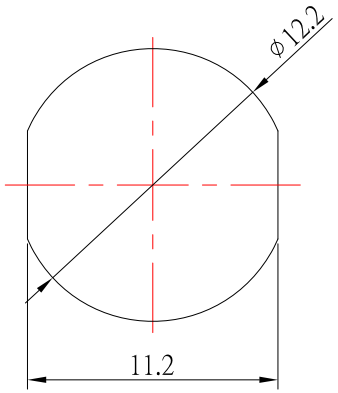

MOUNTING HOLE DIMENSION

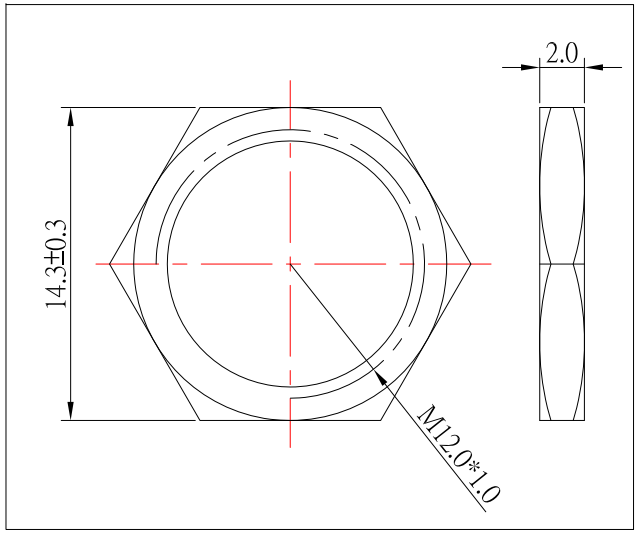

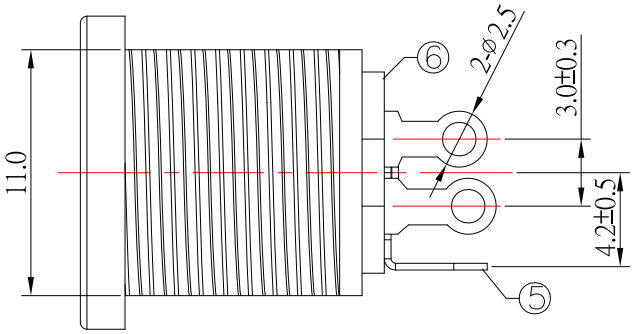

MODEL NO.	DC-D022-x-S124
SCHEMATIC	5/4 (+) 2 3 (−)
CENTER PIN	ø2.0mm
	ø2.5mm

SPECIFICATION

1.Rating ：DC 30V , 3.0A
2.Contact resistance ：≤30mΩ
3.Insulation resistance ：≥100MΩ
4.Withstand voltage ：500VAC
5.Insertion and extraction force ：3-20N
6.life test ：5,000 cycles

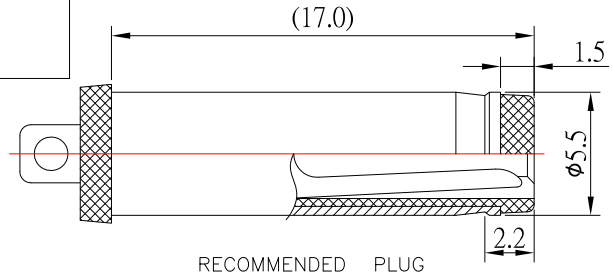

RECOMMENDED PLUG

NO.	DESCRIPTION	QTY	MATERIAL	PLATING
⑦	NUT	1	H59	Ni-Plating
⑥	COVER	1	PF	
⑤	CONTACT FOOT	1	BRASS	Sn-Plating
④	PIN	1	BRASS	Ni-Plating
③	SPRING	1	PHOSPHOR BRONZE	Sn-Plating
②	FLAT PIECE	1	BRASS	Sn-Plating
①	HOUSING	1	PBT	

ITEM NO.	DESCRIPTION	DRAWN	DATE
8	更新圖面	Jack	103122
7	更新尺寸	Jack	051022
6	更新NUT材質	Jack	041922
5	更新圖面	Jack	102720
4	更新材質	Jack	050420
3	更新尺寸	Jack	121119
2	更新尺寸標示位置	Jack	082719
1	更新尺寸	Jack	080519

CONTACT 建倚科技股份有限公司
CONTACT TECHNOLOGY CORP.

TOLERANCE UNLESS OTHERWISE STATED : Up to 5 ±0.2; Above 5 ~ 15 ±0.3; Above 15 ~ 30 ±0.4; Above 30 ~ 50 ±0.5; Angle ±0.3°

3RD. ANGEL'S | UNITS MM

DRAWN BY: Jack Lu	DATE 10/31/22	MAT'L		TITLE	JACK
CHECKED BY: Jacky Chen	DATE 10/31/22	FINISH		MODLE	DC JACK
APPROVED BY: Tony Kao	DATE 10/31/22	SCALE	1 : 1	DWG NO.	DC-D022-x-S124
		SHEET NO.	1 of 1	PART NO.	DC-D022-x-S124

SIZE A4 | VER R8