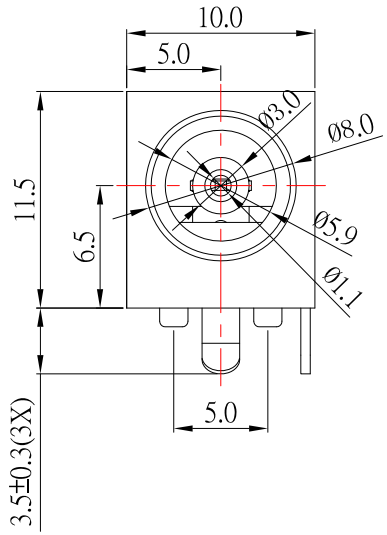

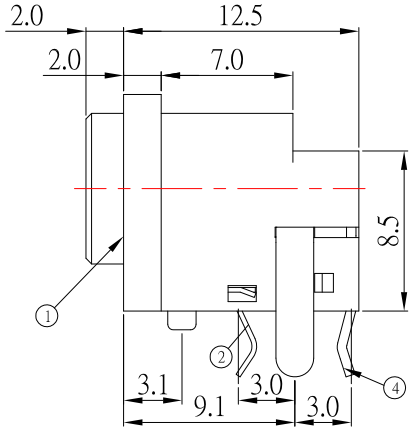

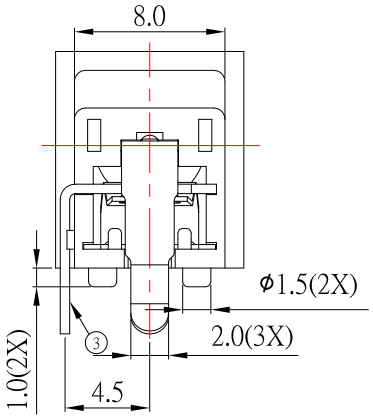

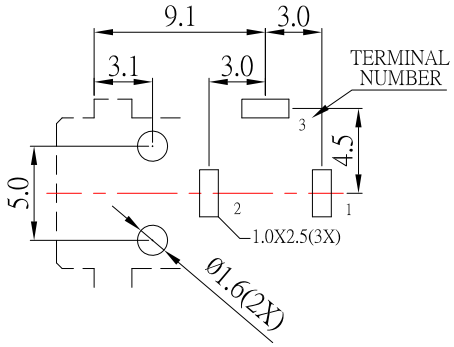

P.C.B LAYOUT
BOTTOM VIEW

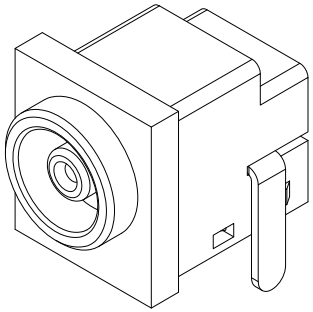

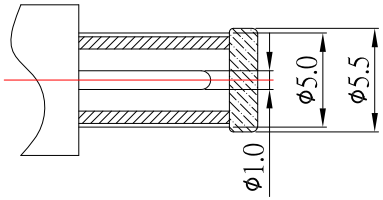

DC MATE PLUG

MODEL NO.	DC-058-2-1.0
SCHEMATIC	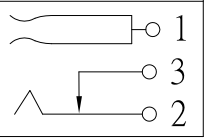

SPECIFICATION

1.Rating ：DC 24V, 3.0A

2.Contact resistance：≤50mΩ

3.Insulation resistance：≥100MΩ

4.Withstand voltage：500VAC

5.Insertion and extraction force：3-30N

6.life test：5,000 cycles

NO.	DESCRIPTION	QTY	MATERIAL	PLATING
4	PIN	1	BRASS	Tin-Plating
3	CONTACT	1	BRASS	Tin-Plating
2	CONTACT	1	COPPER ALLOY	Tin-Plating
1	HOUSING	1	PBT	Black

ITEM NO.	DESCRIPTION	DRAWN	DATE
1	更新MODLE	Jack	081418

CONTACT 建倚科技股份有限公司
CONTACT TECHNOLOGY CORP.

TOLERANCE UNLESS OTHERWISE STATED：Up to 5 ±0.2; Above 5 ~ 15 ±0.3; Above 15 ~ 30 ±0.4; Above 30 ~ 50 ±0.5; Angle ±0.3°

3RD. ANGEL'S

UNITS MM

DRAWN BY: Jack Lu	DATE 08/14/18	MAT'L	
CHECKED BY: Jacky Chen	DATE 08/14/18	FINISH	
APPROVED BY: Tony Kao	DATE 08/14/18	SCALE 1 : 1	SHEET NO. 1 of 1

TITLE	JACK		
MODLE	DC JACK HOUSING:PBT		
DWG NO.	DC-058-2-1.0-S214	SIZE	A4
PART NO.	DC-058-2-1.0-S214	VER	R1