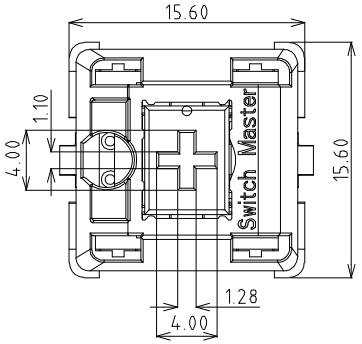

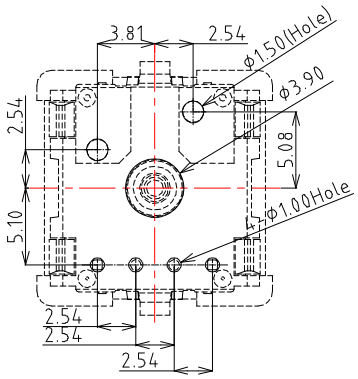

PCB Layout(Pattern Side)

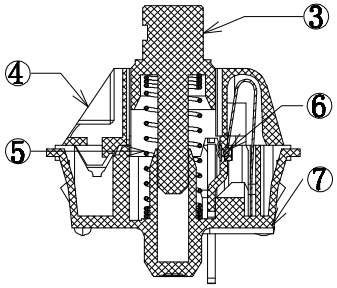

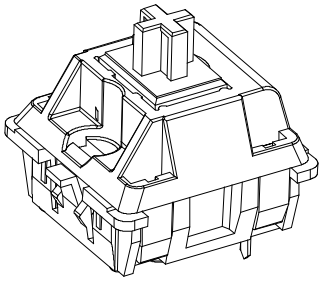

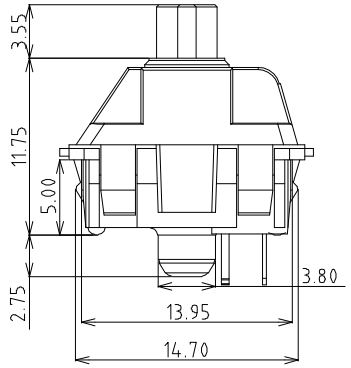

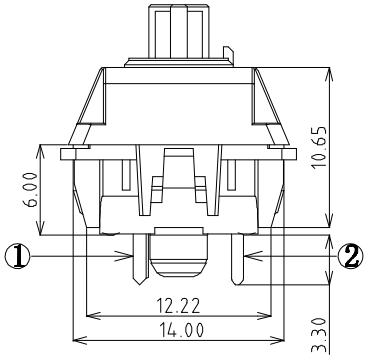

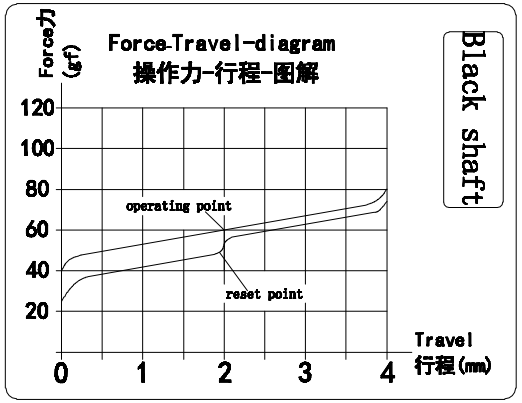

Specification :

1. Rating :12 VAC/DC max. 2 VDC min.
   10mA AC/DC max. 10μA DC min.
2. Contact Resistance : 200mΩ Max
3. Insulation Resistance :100MΩ Min
   (DC100V)
4. Withstand Voltage :AC500V(50-60Hz)
   for 1 minute
5. Bounce Time:≤5msec (at 16 in/sec.
   actuation speed)
6. Operation Force :60±15gf
7. End Force :80±15gf
8. Pretravel:2.0±0.4mm
9. Total travel:4.0 -0.3mm
10. Operating Life :50,000,000 Cycles(min)

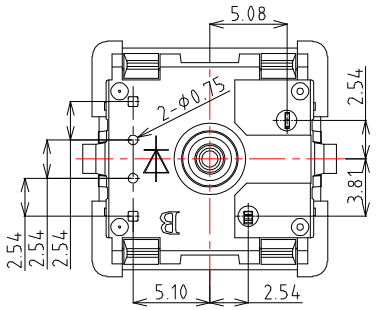

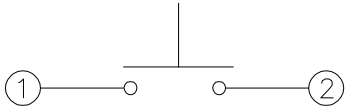

Circuit Diagran

ITEM	PART NAME	TER'NO.	QTY.	MATERIAL	FINISHING	REMARK
⑦	Base	——	1	Nylon	Black	——
⑥	contact	——	2	Silver alloy	Brushing Gold	——
⑤	Spring	——	1	Stainless Steel	——	——
④	Cover	——	1	Nylon	Black	——
③	Keystroke	——	1	POM	Black(Black3C)	——
②	Terminal	——	1	Brass	Plating Nickel	——
①	Reed	——	1	Copper Alloy	——	——

ITEM NO.	DESCRIPTION	DRAWN	DATE

CONTACT 建倚科技股份有限公司
CONTACT TECHNOLOGY CORP.

TOLERANCE UNLESS OTHERWISE STATED : Up to 5 ±0.2; Above 5 ~ 15 ±0.3; Above 15 ~ 30 ±0.4; Above 30 ~ 50 ±0.5; Angle ±0.3°

3RD. ANGEL'S | UNITS | MM

DRAWN BY: Jack Lu	DATE 12/16/15	MAT'L		TITLE	SWITCH
CHECKED BY: Jacky Chen	DATE 12/16/15	FINISH		MODLE	Keyboard Switch / Black Shaft
APPROVED BY: Tony Kao	DATE 12/16/15	SCALE	1 : 1	DWG NO.	KS-01B-60-S105
		SHEET NO.	1 of 1	PART NO.	KS-01B-60-S105

SIZE A4 | VER R