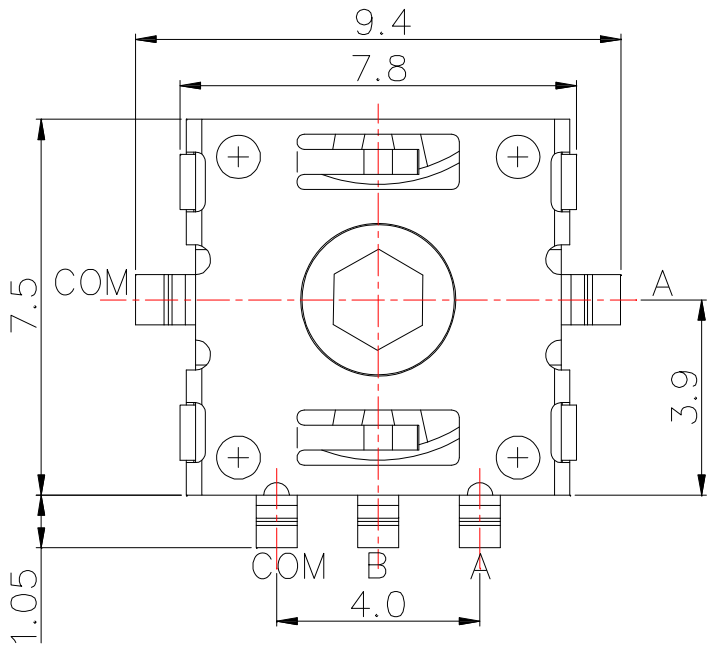

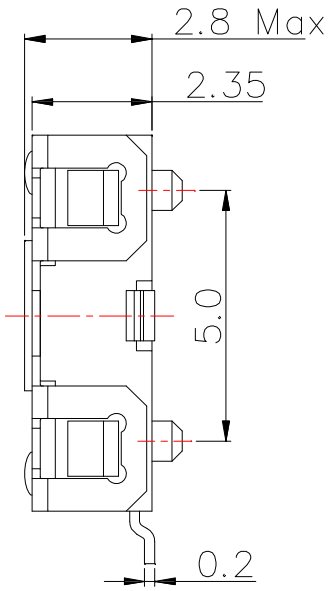

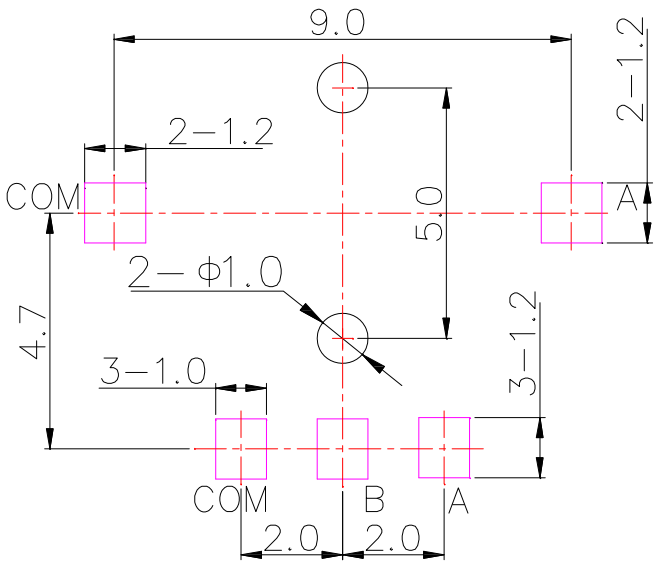

P.C.B LAYOUT

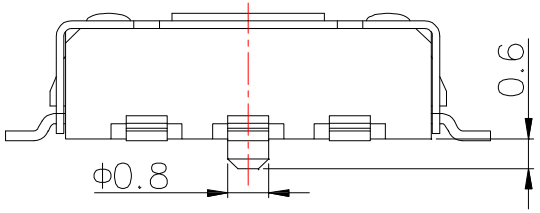

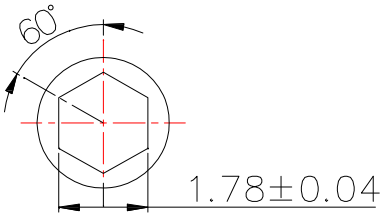

Shaft hole shape and dimension

SPECIFICATIONS

1.Rating : DC 10V , 1.0 mA ;

2.Operating force : 30 ±20 gf ;

3.Contact resistance : 10Ω Max ;

4.Life : 300,000 Cycles (Forward and reverse each:150,000Cycles)

ITEM NO.	DESCRIPTION	DRAWN	DATE

CONTACT 建倚科技股份有限公司 CONTACT TECHNOLOGY CORP.

TOLERANCE UNLESS OTHERWISE STATED : Up to 5 ±0.2; Above 5 ~ 15 ±0.3; Above 15 ~ 30 ±0.4; Above 30 ~ 50 ±0.5; Angle ±0.3°

3RD. ANGEL'S | UNITS MM

DRAWN BY: Jack Lu	DATE 02/24/23	MAT'L		TITLE	ENCODER		
CHECKED BY: Jacky Chen	DATE 02/24/23	FINISH		MODLE	ENCODER		
APPROVED BY: Tony Kao	DATE 02/24/23	SCALE	1 : 1	DWG NO.	K50-A	SIZE	A4
		SHEET NO.	1 of 1	PART NO.	K50-A	VER	R