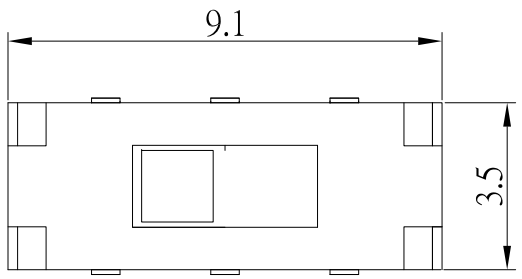

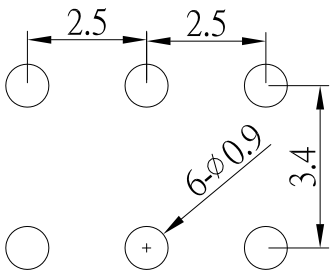

P.C.B LAND PATTERN

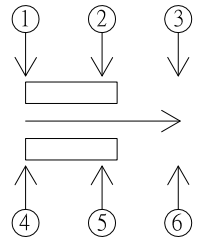

CIRCUIT DIAGRAM

NO	MODEL	KNOB(X)
1	SS-D35	2.0 mm
2	SS-D35B	4.0 mm
3	SS-D35D	5.0 mm

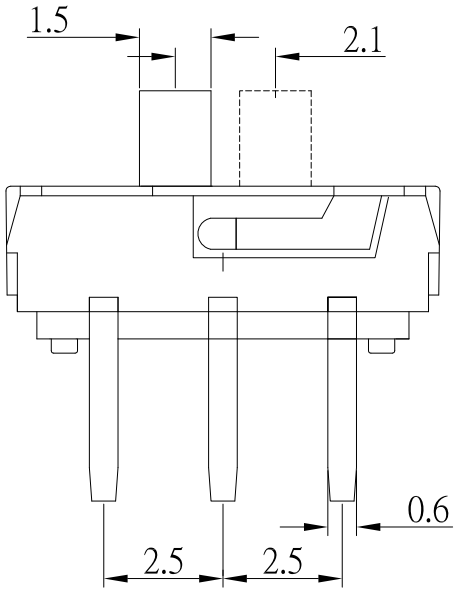

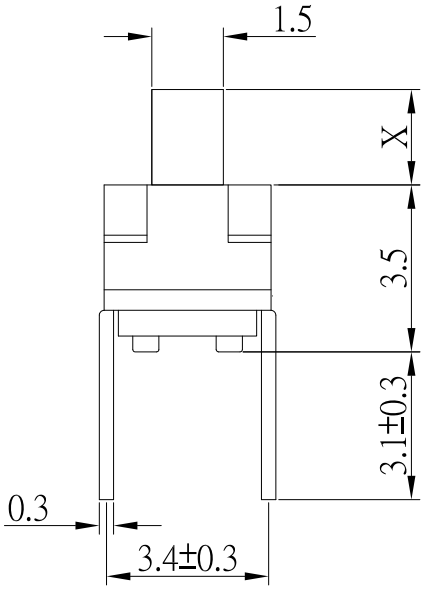

SPECIFICATIONS

Rating	10mA 12V DC
Insulation Resistance	50MΩ Min.
Dielectric Withstanding Voltage	AC 250 V
Contact Resistance	100mΩ Max.
Operating Force	160 ± 50gf
Operating Life	10,000 cycles

NO.	DESCRIPTION	QTY	MATERIAL	PLATING
E	TERMINAL	6	PHOSPHOR BRONZE	Ag plated
D	CLIP	2	PHOSPHOR BRONZE	Ag plated
C	COVER	1	SUS	
B	CASE	1	PA	Black
A	SLIDER	1	PA	Black

ITEM NO.	DESCRIPTION	DRAWN	DATE
1	新增柄長選項更新SPEC和材質	Jack	111921

CONTACT 建倚科技股份有限公司
CONTACT TECHNOLOGY CORP.

TOLERANCE UNLESS OTHERWISE STATED : Up to 5 ±0.2; Above 5 ~ 15 ±0.3; Above 15 ~ 30 ±0.4; Above 30 ~ 50 ±0.5; Angle ±0.3°

3RD. ANGEL'S | UNITS | MM

DRAWN BY: Jack Lu	DATE 11/19/21	MAT'L		TITLE	SWITCH		
CHECKED BY: Jacky Chen	DATE 11/19/21	FINISH		MODLE	SLIDE SWICTH		
APPROVED BY: Tony Kao	DATE 11/19/21	SCALE	1 : 1	DWG NO.	SS-D35x-B-S246	SIZE	A4
		SHEET NO.	1 of 1	PART NO.	SS-D35x-B-S246	VER	R1