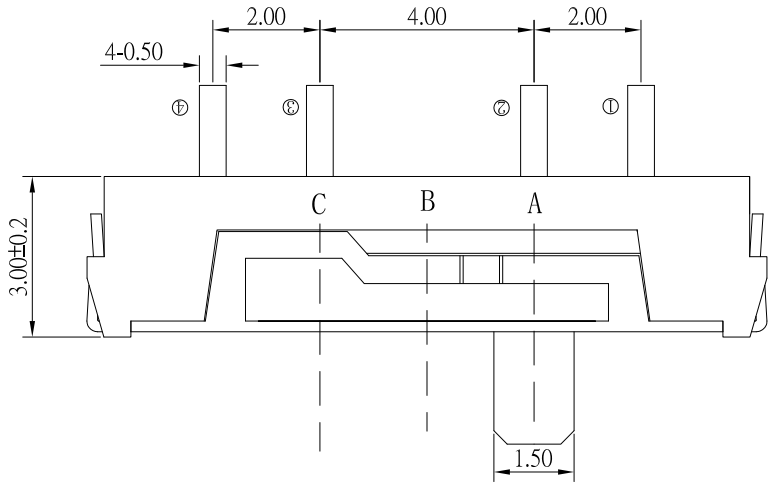

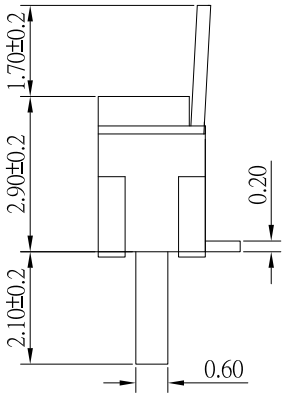

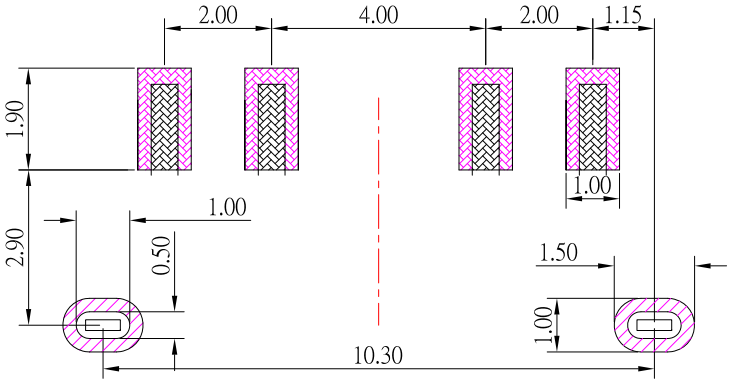

P.C.B LAND PATTERN

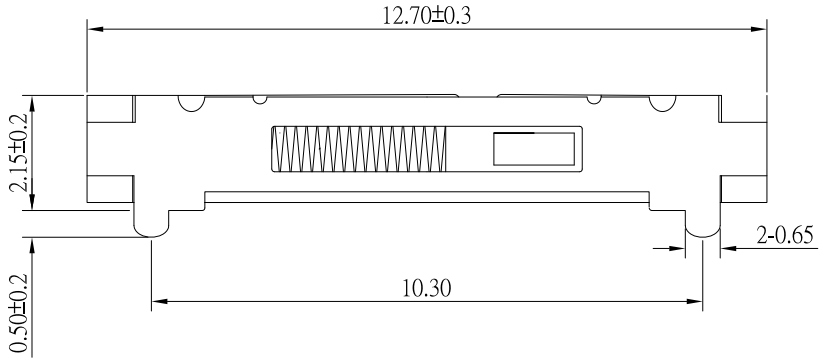

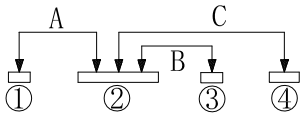

CIRCUIT DIAGRAM

SPECIFICATIONS

Rating	100mA , 12V DC
Insulation Resistance	50MΩ Min.
Dielectric Withstanding Voltage	AC 250 V(50Hz)1min
Contact Resistance	100mΩ Max.
Operating Force	200 ± 70gf
Operating Life	10,000 cycles
Travel	2.0 ± 0.2mm

NO.	DESCRIPTION	QTY	MATERIAL	PLATING
E	SPRING	1	SUS	
E	TERMINAL	4	PHOSPHOR BRONZE	Ag plated
D	CLIP	1	PHOSPHOR BRONZE	Ag plated
C	COVER	1	SUS	
B	CASE	1	LCP	Black
A	SLIDER	1	PA46	Black

ITEM NO.	DESCRIPTION	DRAWN	DATE
8	更新PCB LAYOUT中挖孔樣式	Jack	032124
7	更新圖面	Jack	102423
6	更新MODLE	Jack	010219
5	更新SPEC及材質	Jack	100814
4	更新為A0版	Jack	020514
3	新增SPRING圖示	Jack	011314
2	新增撥柄位置識意圖	Jack	010914
1	更新Rating	Jack	062813

CONTACT 建倚科技股份有限公司
CONTACT TECHNOLOGY CORP.

TOLERANCE UNLESS OTHERWISE STATED : Up to 5 ±0.2; Above 5 ~ 15 ±0.3; Above 15 ~ 30 ±0.4; Above 30 ~ 50 ±0.5; Angle ±0.3°

3RD. ANGEL'S | UNITS | MM

DRAWN BY: Jack Lu	DATE 03/21/24	MAT'L		TITLE	SWITCH		
CHECKED BY: Jacky Chen	DATE 03/21/24	FINISH		MODLE	SMT SLIDE SWICTH 左邊復歸，2 段固定		
APPROVED BY: Tony Kao	DATE 03/21/24	SCALE	1 : 1	DWG NO.	SS-C70R-1-S246	SIZE	A4
		SHEET NO.	1 of 1	PART NO.	SS-C70R-1-S246	VER	R8